PHILIPS

DynaVision Programmable Xtreme for CPO

DDVPXCPO



Xtreme drivers for maximum energy savings

Highly reliable and flexible electronic drivers for CPO lamps; designed to save on energy costs via integrated controls and to reduce maintenance costs thanks to 80,000-hour lifetime and integrated lightning protection. The DynaVision Programmable product family is the perfect basis for any sort of lighting management solution.

Benefits

- Enables 2-way communication with the lighting network (via DALI)
- Minimizes maintenance cost due to the Xtreme lifetime of 80,000 hours and the integrated lightning protection
- Together with the CPO lamp the driver creates the most efficient white-light system in the industry in its power range

Applications

- Road lighting
- Residential lighting
- City beautification

Features

- Programmable by means of standard digital interface (DALI) and controllable via DALI protocol
- Integrates several control options (DynaDimmer, LineSwitch, AmpDim, Constant Light Output, Adjustable Light Output)

- Longest lifetime for electronic drivers: 80,000 hours with minimum 90% survival at Tc = 80 °C
- Xtreme lightning protection 10 kV/5 kA
- Accurate lamp power stabilization of 95-97% over wide mains-voltage range of 180-300 V

Versions



GPPR_IDVLSCPO_PHL_0002-Product photo



GPPR IDVLSCPO 0002



GPPR_IDVLSCPO_0001-Product photo



GPPR_IDVLSCPO_0006-Product photo

Dimensional drawing

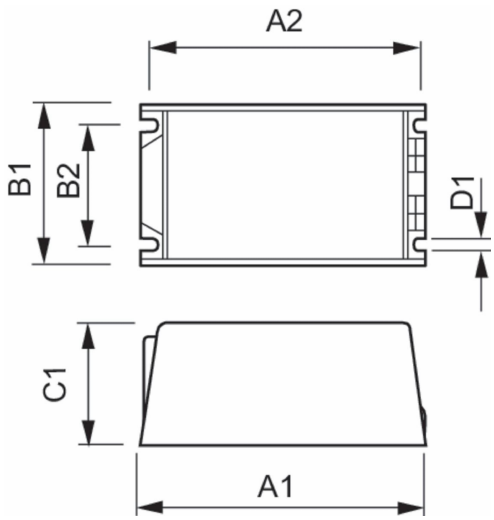

Product	D1	C1	A1	A2	B1	B2
HID-DV PROG Xt 140 CPO C1 208-277V	5.0 mm	65.0 mm	150.0 mm	135.9 mm	65.0 mm	46.8 mm
HID-DV PROG Xt 90 CPO C1 208-277V	5.0 mm	65.0 mm	150.0 mm	135.9 mm	65.0 mm	46.8 mm

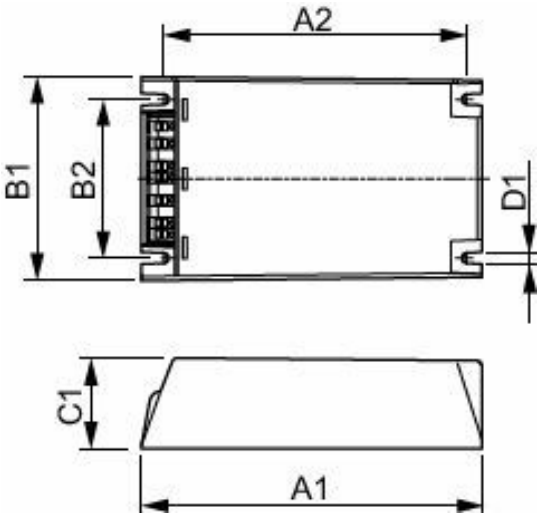

Product	D1	C1	A1	A2	B1	B2
HID-DV PROG Xt 140 CPO Q 208-277V	4.5 mm	40.0 mm	150.0 mm	133.6 mm	90.0 mm	70.0 mm
HID-DV PROG Xt 45 CPO Q 208-277V	4.5 mm	40.0 mm	150.0 mm	133.6 mm	90.0 mm	70.0 mm
HID-DV PROG Xt 60 CPO Q 208-277V	4.5 mm	40.0 mm	150.0 mm	133.6 mm	90.0 mm	70.0 mm
HID-DV PROG Xt 90 CPO Q 208-277V	4.5 mm	40.0 mm	150.0 mm	133.6 mm	90.0 mm	70.0 mm

Operating and Electrical

Input Voltage	208-240-277 V
Line Frequency	50 to 60 Hz
Input Frequency	50 to 60 Hz

Operating and Electrical

Order Code	Full Product Name	Number of Products on MCB (16A Type B) (Nom)
913700675166	HID-DV PROG Xt 90 CPO C1 208-277V	5
913700675266	HID-DV PROG Xt 140 CPO C1 208-277V	5
913700685766	HID-DV PROG Xt 60 CPO Q 208-277V	11
913700685966	HID-DV PROG Xt 140 CPO Q 208-277V	5
913700692866	HID-DV PROG Xt 45 CPO Q 208-277V	11
913700685866	HID-DV PROG Xt 90 CPO Q 208-277V	5

Mechanical and Housing

Order Code	Full Product Name	Housing
913700675166	HID-DV PROG Xt 90 CPO C1 208-277V	C1
913700675266	HID-DV PROG Xt 140 CPO C1 208-277V	C1
913700685766	HID-DV PROG Xt 60 CPO Q 208-277V	Q
913700685966	HID-DV PROG Xt 140 CPO Q 208-277V	Q
913700692866	HID-DV PROG Xt 45 CPO Q 208-277V	Q
913700685866	HID-DV PROG Xt 90 CPO Q 208-277V	Q

© 2026 Signify Holding. All rights reserved. The information provided herein is subject to change, without notice. Signify does not give any representation or warranty as to the accuracy or completeness of the information included herein and shall not be liable for any action in reliance thereon. The information presented in this document is not intended as any commercial offer and does not form part of any quotation or contract, unless otherwise agreed by Signify. Philips and the Philips Shield Emblem are registered trademarks of Koninklijke Philips N.V.