PHILIPS

SmartBright Pro Downlight gen2

DN068B



Full cut out size, Full CCT Range, Full lumen output, Recessed Installation

The SmartBright Pro Downlight comes offering reliable lighting performance with recessed installation, suitable for diversified applications. Full cut out size from D75 to D200, full CCT range covering 3000K, 4000K and 6500K, lumen output covers 400lm to 2000lm, eye comfort experience with low flicker lighting can attract you more with its elegant design.

Benefits

- Recessed Installation
- Elegant look & feel
- Eye comfort experience with low flicker lighting
- CB / EMC compliance product with Philips brand promise

Applications

- Residential
- Hospitality
- Retail
- Shopping mall
- Hotels

Features

- Cut out: D75, D100, D125, D150, D175, D200
- 4 CCT: 3000K, 4000K and 6500K
- Input voltage is 220-240V
- PF0.9
- Efficacy: up to 110lm/W
- CRI80
- IP44(front)/IP20(back)
- lifetime: 50khrs @L70&Ta25℃
- Working temperature: -20℃ to +40℃

Versions



Smartbright Pro Downlight gen2



Smartbright Pro Downlight gen2



Smartbright Pro Downlight gen2



Smartbright Pro Downlight gen2



Smartbright Pro Downlight gen2



Smartbright Pro Downlight gen2

Dimensional drawing

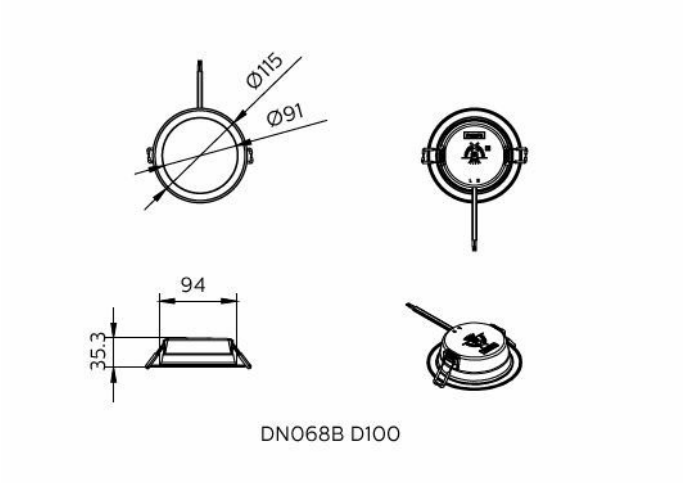

DN068B G2 LED6/840 PSU D100

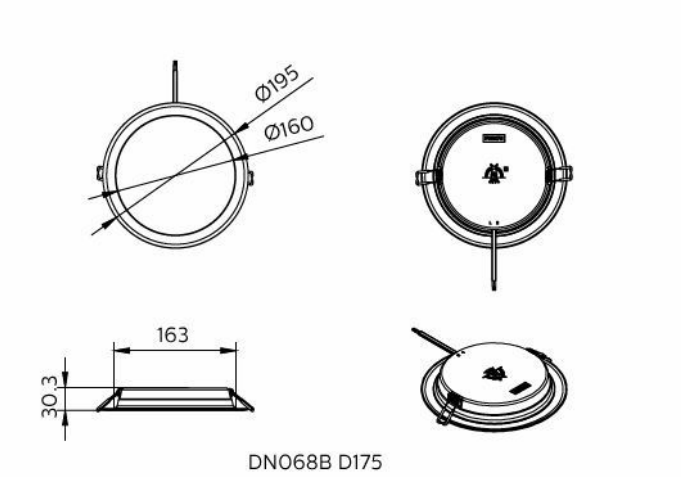

DN068B G2 LED15/840 PSU D175

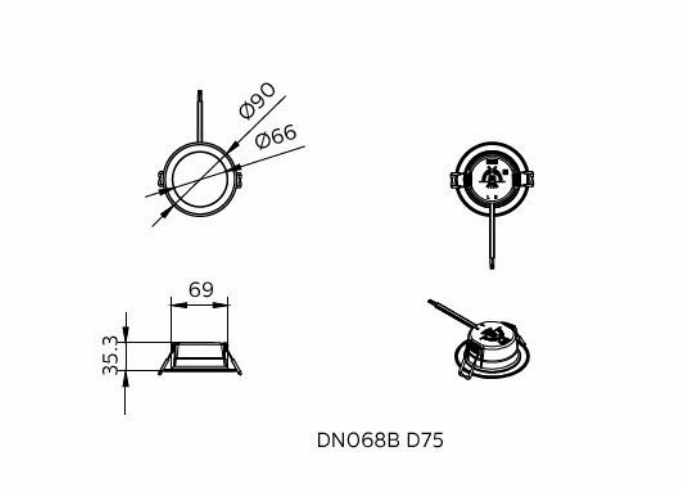

DN068B G2 LED4/865 PSU D75

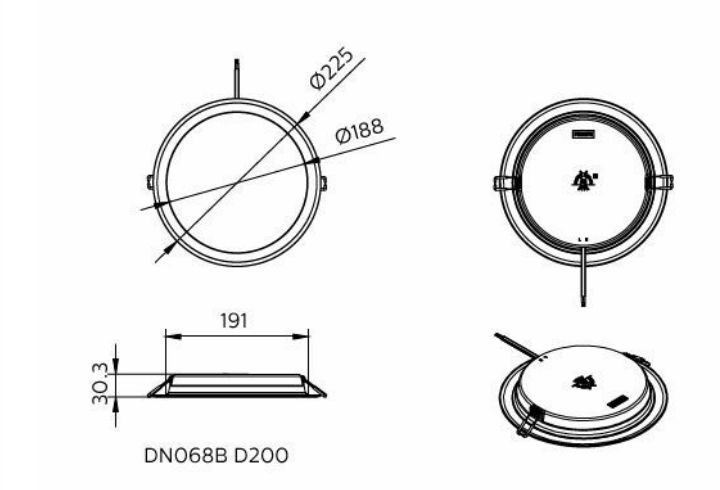

DN068B G2 LED20/865 PSU D200

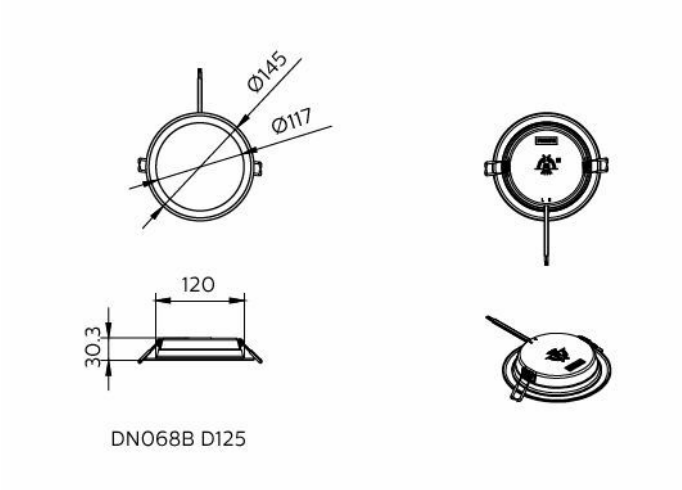

DN068B G2 LED13/840 PSU D125

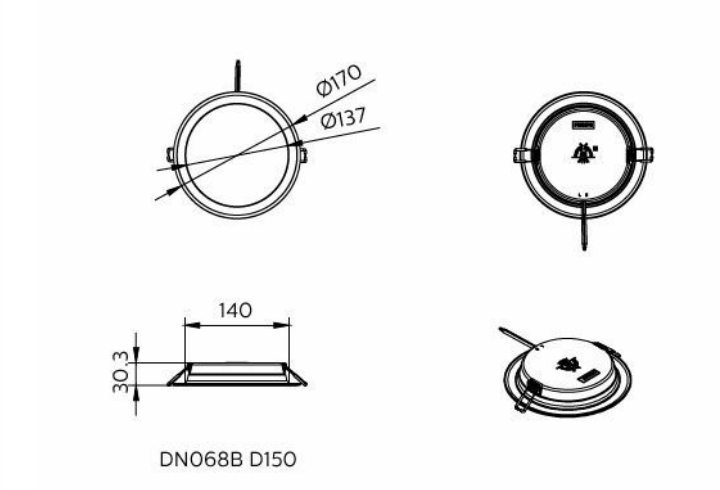

DN068B G2 LED16/865 PSU D150

General Information

Number of gear units	1 unit
Gear	EB [Electronic]
Driver included	Yes

Light Technical

Color rendering index (CRI)	80
Number of light sources	1
Beam angle of light source	110 degree(s)
Optic type	Beam angle 110°

Operating and Electrical

Input Voltage	220 to 240 V
Line Frequency	50 or 60 Hz
Suitable for random switching	No
Protection class IEC	Safety class II

Controls and Dimming

Dimmable	-
Maximum dim level	Not applicable

Mechanical and Housing

Housing Color	White
Ingress protection code	IP20(IP44 front)
Mech. impact protection code	IK03 [0.3 J]
Optical cover type	Polycarbonate micro lens optic

Approval and Application

Glow-wire test	Temperature 650 °C, duration 30 s
Flammability mark	For mounting on normally flammable surfaces
CE mark	No
ENEC mark	-
Ambient temperature range	-20 to +40 °C

Initial Performance (IEC Compliant)

Luminous flux tolerance	+/-10%

Light Technical

Order Code	Full Product Name	Luminous Flux	Correlated Color Temperature (Nom)	Luminous Efficacy (rated) (Nom)
911401861587	DN068B G2 LED6/830 PSU D100	570 lm	3000 K	105 lm/W
911401861687	DN068B G2 LED6/840 PSU D100	600 lm	4000 K	110 lm/W
911401861787	DN068B G2 LED6/865 PSU D100	600 lm	6500 K	110 lm/W
911401861887	DN068B G2 LED9/830 PSU D100	855 lm	3000 K	105 lm/W
911401861987	DN068B G2 LED9/840 PSU D100	900 lm	4000 K	110 lm/W
911401862087	DN068B G2 LED9/865 PSU D100	900 lm	6500 K	110 lm/W
911401861287	DN068B G2 LED4/830 PSU D75	380 lm	3000 K	100 lm/W
911401861387	DN068B G2 LED4/840 PSU D75	400 lm	4000 K	105 lm/W
911401861487	DN068B G2 LED4/865 PSU D75	400 lm	6500 K	105 lm/W
911401863687	DN068B G2 LED19/830 PSU D200	1,900 lm	3000 K	105 lm/W
911401863787	DN068B G2 LED20/840 PSU D200	2,000 lm	4000 K	110 lm/W

Order Code	Full Product Name	Luminous Flux	Correlated Color Temperature (Nom)	Luminous Efficacy (rated) (Nom)
911401863887	DN068B G2 LED20/865 PSU D200	2,000 lm	6500 K	110 lm/W
911401862187	DN068B G2 LED9/830 PSU D125	855 lm	3000 K	105 lm/W
911401862287	DN068B G2 LED9/840 PSU D125	900 lm	4000 K	110 lm/W
911401862387	DN068B G2 LED9/865 PSU D125	900 lm	6500 K	110 lm/W
911401862487	DN068B G2 LED12/830 PSU D125	1,235 lm	3000 K	105 lm/W
911401862587	DN068B G2 LED13/840 PSU D125	1,300 lm	4000 K	110 lm/W
911401862687	DN068B G2 LED13/865 PSU D125	1,300 lm	6500 K	110 lm/W
911401862787	DN068B G2 LED11/830 PSU D150	1,140 lm	3000 K	105 lm/W
911401862887	DN068B G2 LED12/840 PSU D150	1,200 lm	4000 K	110 lm/W
911401862987	DN068B G2 LED12/865 PSU D150	1,200 lm	6500 K	110 lm/W
911401863087	DN068B G2 LED15/830 PSU D150	1,520 lm	3000 K	105 lm/W
911401863187	DN068B G2 LED16/840 PSU D150	1,600 lm	4000 K	110 lm/W
911401863287	DN068B G2 LED16/865 PSU D150	1,600 lm	6500 K	110 lm/W
911401863387	DN068B G2 LED14/830 PSU D175	1,524 lm	3000 K	105 lm/W
911401863487	DN068B G2 LED15/840 PSU D175	1,500 lm	4000 K	110 lm/W
911401863587	DN068B G2 LED15/865 PSU D175	1,500 lm	6500 K	110 lm/W

Operating and Electrical

Order Code	Full Product Name	Power Consumption
911401861587	DN068B G2 LED6/830 PSU D100	5.5 W
911401861687	DN068B G2 LED6/840 PSU D100	5.5 W
911401861787	DN068B G2 LED6/865 PSU D100	5.5 W
911401861887	DN068B G2 LED9/830 PSU D100	8 W
911401861987	DN068B G2 LED9/840 PSU D100	8 W
911401862087	DN068B G2 LED9/865 PSU D100	8 W
911401861287	DN068B G2 LED4/830 PSU D75	3.8 W
911401861387	DN068B G2 LED4/840 PSU D75	3.8 W
911401861487	DN068B G2 LED4/865 PSU D75	3.8 W
911401863687	DN068B G2 LED19/830 PSU D200	18 W
911401863787	DN068B G2 LED20/840 PSU D200	18 W
911401863887	DN068B G2 LED20/865 PSU D200	18 W
911401862187	DN068B G2 LED9/830 PSU D125	8 W
911401862287	DN068B G2 LED9/840 PSU D125	8 W
911401862387	DN068B G2 LED9/865 PSU D125	8 W
911401862487	DN068B G2 LED12/830 PSU D125	12 W
911401862587	DN068B G2 LED13/840 PSU D125	12 W
911401862687	DN068B G2 LED13/865 PSU D125	12 W
911401862787	DN068B G2 LED11/830 PSU D150	11 W
911401862887	DN068B G2 LED12/840 PSU D150	11 W
911401862987	DN068B G2 LED12/865 PSU D150	11 W
911401863087	DN068B G2 LED15/830 PSU D150	15 W
911401863187	DN068B G2 LED16/840 PSU D150	15 W

Order Code	Full Product Name	Power Consumption
911401863287	DN068B G2 LED16/865 PSU D150	15 W
911401863387	DN068B G2 LED14/830 PSU D175	14 W
911401863487	DN068B G2 LED15/840 PSU D175	14 W
911401863587	DN068B G2 LED15/865 PSU D175	14 W

Initial Performance (IEC Compliant)

Order Code	Full Product Name	Initial chromaticity
911401861587	DN068B G2 LED6/830 PSU D100	(0.44, 0.40) SDCM≤6
911401861687	DN068B G2 LED6/840 PSU D100	(0.38, 0.38) SDCM≤6
911401861787	DN068B G2 LED6/865 PSU D100	(0.31, 0.34) SDCM≤6
911401861887	DN068B G2 LED9/830 PSU D100	(0.44, 0.40) SDCM≤6
911401861987	DN068B G2 LED9/840 PSU D100	(0.38, 0.38) SDCM≤6
911401862087	DN068B G2 LED9/865 PSU D100	(0.31, 0.34) SDCM≤6
911401861287	DN068B G2 LED4/830 PSU D75	(0.44, 0.40) SDCM≤6
911401861387	DN068B G2 LED4/840 PSU D75	(0.38, 0.38) SDCM≤6
911401861487	DN068B G2 LED4/865 PSU D75	(0.31, 0.34) SDCM≤6
911401863687	DN068B G2 LED19/830 PSU D200	(0.44, 0.40) SDCM≤6
911401863787	DN068B G2 LED20/840 PSU D200	(0.38, 0.38) SDCM≤6
911401863887	DN068B G2 LED20/865 PSU D200	(0.31, 0.34) SDCM≤6
911401862187	DN068B G2 LED9/830 PSU D125	(0.44, 0.40) SDCM≤6
911401862287	DN068B G2 LED9/840 PSU D125	(0.38, 0.38) SDCM≤6
911401862387	DN068B G2 LED9/865 PSU D125	(0.31, 0.34) SDCM≤6
911401862487	DN068B G2 LED12/830 PSU D125	(0.44, 0.40) SDCM≤6
911401862587	DN068B G2 LED13/840 PSU D125	(0.38, 0.38) SDCM≤6
911401862687	DN068B G2 LED13/865 PSU D125	(0.31, 0.34) SDCM≤6
911401862787	DN068B G2 LED11/830 PSU D150	(0.44, 0.40) SDCM≤6
911401862887	DN068B G2 LED12/840 PSU D150	(0.38, 0.38) SDCM≤6
911401862987	DN068B G2 LED12/865 PSU D150	(0.31, 0.34) SDCM≤6
911401863087	DN068B G2 LED15/830 PSU D150	(0.44, 0.40) SDCM≤6
911401863187	DN068B G2 LED16/840 PSU D150	(0.38, 0.38) SDCM≤6
911401863287	DN068B G2 LED16/865 PSU D150	(0.31, 0.34) SDCM≤6
911401863387	DN068B G2 LED14/830 PSU D175	(0.44, 0.40) SDCM≤6
911401863487	DN068B G2 LED15/840 PSU D175	(0.38, 0.38) SDCM≤6
911401863587	DN068B G2 LED15/865 PSU D175	(0.31, 0.34) SDCM≤6

© 2026 Signify Holding. All rights reserved. The information provided herein is subject to change, without notice. Signify does not give any representation or warranty as to the accuracy or completeness of the information included herein and shall not be liable for any action in reliance thereon. The information presented in this document is not intended as any commercial offer and does not form part of any quotation or contract, unless otherwise agreed by Signify. Philips and the Philips Shield Emblem are registered trademarks of Koninklijke Philips N.V.