PHILIPS

WT050C 1xTLED L1500

911401807581



Ledinaire Waterproof Tube Housing, L1500 mm, IP65, IK08

L1500 mm, IP65 | Dust penetration-protected, jet-proof, IK08 | 5 J vandal-protected, Safety class II

General Information

Value ladder	Value
Warranty period	5 years

Light Technical

Color rendering index (CRI)	-
Luminaire light beam spread	-

Operating and Electrical

Input Voltage	220 to 240 V
Line Frequency	50 or 60 Hz
Protection class IEC	Safety class II

Mechanical and Housing

Overall length	1,580 mm
Overall width	69 mm
Overall height	70 mm
Overall diameter	0 mm
Dimensions (Height x Width x Depth)	70 x 69 x 1580 mm
Material	Polycarbonate
Ingress protection code	IP65 [Dust penetration-protected, jet-proof]
Mech. impact protection code	IK08 [5 J vandal-protected]
Accessory color	Gray
Angle	-
Net Weight (Piece)	0.880 kg

Approval and Application

CE mark	Yes
EU RoHS compliant	Yes

Sustainability Data

Non-virgin material ratio of the packaging	Cardboard > 80% recycled
Packaging Recyclable content ratio	Cardboard recycling rate > 80%
Packaging Material	Cardboard

Product Data

Order product name	WT050C 1xTLED L1500
Full product name	WT050C 1xTLED L1500
Full product code	871016336604399
Order code	911401807581
Material Nr. (12NC)	911401807581
Numerator - Quantity Per Pack	1
EAN/UPC - Product/Case	8710163366043
Numerator - Packs per outer box	12
EAN/UPC - Case	8710163366203

Dimensional drawing

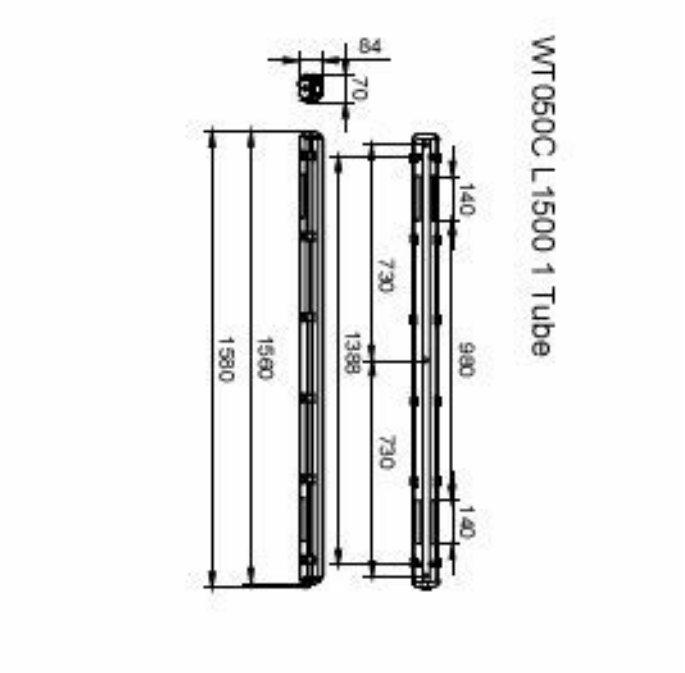

Compatible Accesories

Accessory Image	Accessory Code	Accessory Name	Website
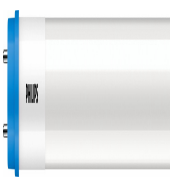	929001875002	CorePro LEDtube 1500mm HO 24W 865 T8	Product Website
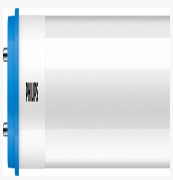	929003547402	CorePro LEDtube 1500mm 20W 840 T8	Product Website

Related Documents

Documents and certificates	Document Name	Download
Installation Instructions	MI_WT050C_20200807_FINAL.pdf	Download

© 2026 Signify Holding. All rights reserved. The information provided herein is subject to change, without notice. Signify does not give any representation or warranty as to the accuracy or completeness of the information included herein and shall not be liable for any action in reliance thereon. The information presented in this document is not intended as any commercial offer and does not form part of any quotation or contract, unless otherwise agreed by Signify. Philips and the Philips Shield Emblem are registered trademarks of Koninklijke Philips N.V.