PHILIPS

## UNILinear Flex

BGC301



# UNILinear Flex. a cove lighting with vivid color

UNILinear Flex is really and excellently waterproof and anti-dust LED strips with professional design to guarantee lighting performance. Thanks to filling with anti-UV polyurethane and processing by irrigation methods sealing glue, it not only ensure high quality of lighting color consistency but also protect products outdoor against from harsh environments outdoors.It's can be used for decoration lighting and guidance lighting outdoors, the higher CRI (80) delivers good performance of lighting in color rendering.

### Benefits

- Water-proof and vivid light color
- Less maintenance cost and less concerns on water invasion

### Applications

- Decorative lighting
- Guidance lighting
- Cove lighting

### Features

- Sealed with anti-UV polyurethane without color shifting and anti-UV aging
- Various lumen output from 400lm to 1200lm per meter
- Optional CCT 2500K/3000K/4000K/5000K/RGB for different application
- CRI80 for better vivid color rendering
- SDCM≤ 5, better color consistency for visual comfort
- DC 24VDC, Class III for safety use
- Long lifespan 30K hrs. L70B50@35°C
- Lead cable (1000mm) for connection
- CB

## Versions



UNILinear Flex Neon LED strips



UNILinear Flex Neon LED strips



UNILinear Flex Neon LED strips

## Dimensional drawing

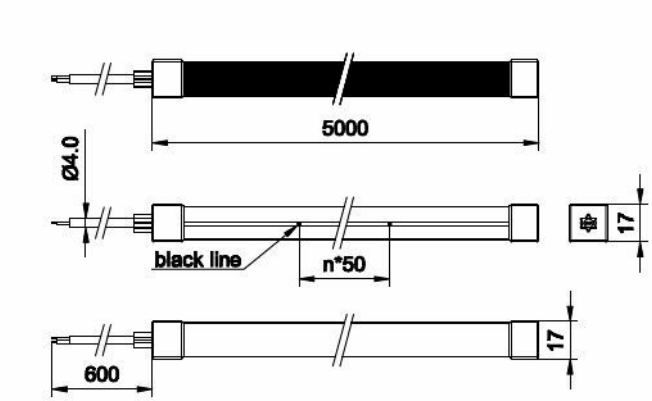


UNILinear Flex Neon LED strips

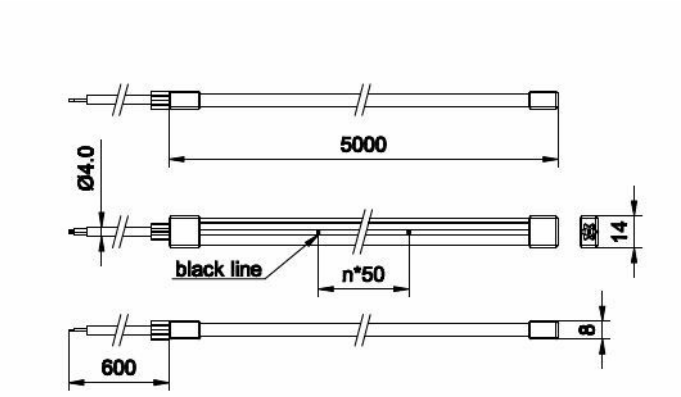


UNILinear Flex Neon LED strips

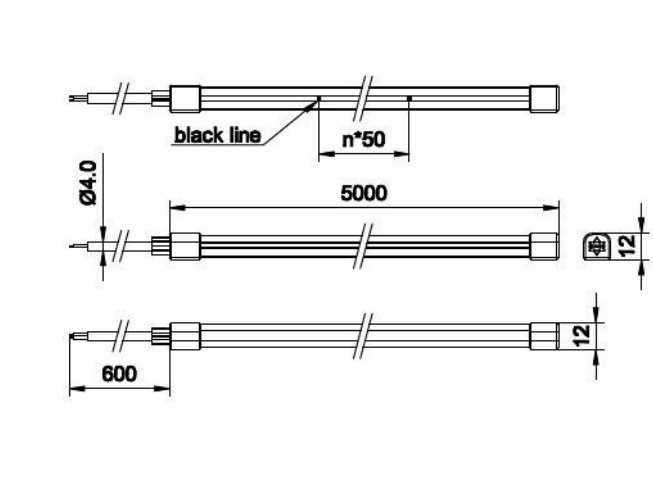


UNILinear Flex Neon LED strips

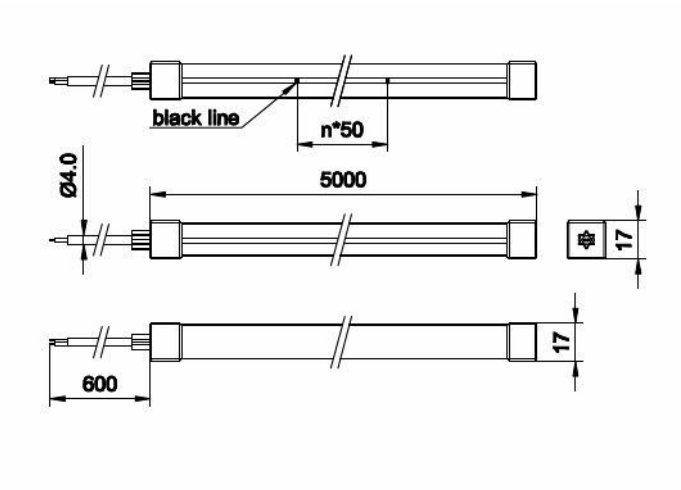


UNILinear Flex Neon LED strips

### General Information

| | |
|---|---|
| Driver included | No |

### Light Technical

| | |
|---|---|
| Color rendering index (CRI) | >90 |

### Controls and Dimming

| | |
|---|---|
| Dimmable | No |

### Mechanical and Housing

| | |
|---|---|
| Housing Color | White |
| Ingress protection code | IP66 [Dust penetration-protected, jet-proof] |
| Mech. impact protection code | IK04 [0.5 J standard plus] |
| Optical cover type | Opal |

### Approval and Application

| | |
|---|---|
| CE mark | No |

## Light Technical

| Order Code | Full Product Name | Luminous Flux | Correlated Color Temperature (Nom) | Light source color |
|---|---|---|---|---|
| 911401767742 | BGC401 1150LM 14W 2700K L5 1010 T G | 5,500 lm | 2700 K | 927 warm white |
| 911401767752 | BGC401 1150LM 14W 3000K L5 1010 T G | 5,750 lm | 3000 K | 930 warm white |
| 911401767762 | BGC401 1150LM 14W 4000K L5 1010 T G | 6,000 lm | 4000 K | 940 neutral white |
| 911401767962 | BGC401 1150LM 14W 3000K L5 1010 T | 5,750 lm | 3000 K | 930 warm white |
| 911401767972 | BGC401 1150LM 14W 4000K L5 1010 T | 6,000 lm | 4000 K | 940 neutral white |
| 911401767702 | BGC401 400LM 10W 2700K L5 0612 S G | 1,500 lm | 2700 K | 927 warm white |
| 911401767712 | BGC401 400LM 10W 3000K L5 0612 S G | 2,000 lm | 3000 K | 930 warm white |
| 911401767922 | BGC401 400LM 10W 3000K L5 0612 S | 2,000 lm | 3000 K | 930 warm white |
| 911401767722 | BGC401 650LM 10W 2700K L5 1515 T G | 3,250 lm | 2700 K | 927 warm white |
| 911401767732 | BGC401 650LM 10W 3000K L5 1515 T G | 3,250 lm | 3000 K | 930 warm white |
| 911401767772 | BGC401 550LM 7W 3500K L5 1515 S G | 2,750 lm | 3500 K | 935 warm white |
| 911401767782 | BGC401 900LM 14W 3500K L5 1515 T G | 4,500 lm | 3500 K | 935 warm white |

## Operating and Electrical

| Order Code | Full Product Name | Power Consumption |
|---|---|---|
| 911401767742 | BGC401 1150LM 14W 2700K L5 1010 T G | 56 W |
| 911401767752 | BGC401 1150LM 14W 3000K L5 1010 T G | 56 W |
| 911401767762 | BGC401 1150LM 14W 4000K L5 1010 T G | 56 W |

| Order Code | Full Product Name | Power Consumption |
|---|---|---|
| 911401767962 | BGC401 1150LM 14W 3000K L5 1010 T | 56 W |
| 911401767972 | BGC401 1150LM 14W 4000K L5 1010 T | 56 W |
| 911401767702 | BGC401 400LM 10W 2700K L5 0612 S G | 43 W |
| 911401767712 | BGC401 400LM 10W 3000K L5 0612 S G | 43 W |
| 911401767922 | BGC401 400LM 10W 3000K L5 0612 S | 43 W |
| 911401767722 | BGC401 650LM 10W 2700K L5 1515 T G | 46 W |
| 911401767732 | BGC401 650LM 10W 3000K L5 1515 T G | 46 W |
| 911401767772 | BGC401 550LM 7W 3500K L5 1515 S G | 35 W |
| 911401767782 | BGC401 900LM 14W 3500K L5 1515 T G | 59 W |

© 2026 Signify Holding. All rights reserved. The information provided herein is subject to change, without notice. Signify does not give any representation or warranty as to the accuracy or completeness of the information included herein and shall not be liable for any action in reliance thereon. The information presented in this document is not intended as any commercial offer and does not form part of any quotation or contract, unless otherwise agreed by Signify. Philips and the Philips Shield Emblem are registered trademarks of Koninklijke Philips N.V.