PHILIPS

ST033T LED9/830 10W 110-240V I MB BK TW

911401892882



Essential Smartbright Projector (Wide Voltage) Gen 2, 10 W, 850 lm, 3000 K

Essential SmartBright Projector ST033T is a value for money product designed for Mass market trade. It is designed to replace halogen and CDM-standard-based projectors for retail and hospitality applications. This track based luminaire supports retailers to let their products stand out, or highlight certain objects. The clean and contemporary design with integrated driver makes the Essential SmartBright Projector relevant to many applications. The choice of 2 colors in White and Black helps the Retailer to choose products best suited to blend into the Store Environment. Compared to it's predecessor, it is not only cost effective, but also a more sleek and lighter product design.

General Information

Light source engine type	LED
Value ladder	Value

Light Technical

Luminous Flux	850 lm
Correlated Color Temperature (Nom)	3000 K
Luminous Efficacy (rated) (Nom)	85 lm/W
Color rendering index (CRI)	>80
Light source color	830 warm white

Operating and Electrical

Input Voltage	110 to 240 V
Line Frequency	50 or 60 Hz
Inrush current	6 A
Power Consumption	10 W
Power Factor (Fraction)	0.9
Number of products on MCB of 16 A type B	115
Protection class IEC	Safety class II

Controls and Dimming

Dimmable	No
Control interface	-

Mechanical and Housing

Housing Material	Aluminum
Optical cover material	Polycarbonate
Housing Color	Black
Optical cover finish	Textured
Overall length	192 mm
Overall width	129 mm
Overall height	49 mm
Overall diameter	49 mm
Dimensions (Height x Width x Depth)	49 x 129 x 192 mm
Ingress protection code	IP20 [Finger-protected]
Mech. impact protection code	IK03 [0.3 J]
Optical cover type	Collimator with focus angle 24°
Net Weight (Piece)	0.197 kg

Approval and Application

Flammability mark	For mounting on normally flammable surfaces
CE mark	No
Ambient temperature range	-20 to +45 °C

Initial Performance (IEC Compliant)

Luminous flux tolerance	+/-10%
Initial chromaticity	(0.4338, 0.4030) SDCM <5
Power consumption tolerance	+/-10%

Product Data

Order product name	ST033T LED9/830 10W 110-240V I MB BK TW
Full product name	ST033T LED9/830 10W 110-240V I MB BK TW
Full product code	871951454611099
Order code	911401892882
Material Nr. (12NC)	911401892882
Numerator - Quantity Per Pack	1
EAN/UPC - Product/Case	8719514546110
Numerator - Packs per outer box	48
EAN/UPC - Case	8719514546271

Dimensional drawing

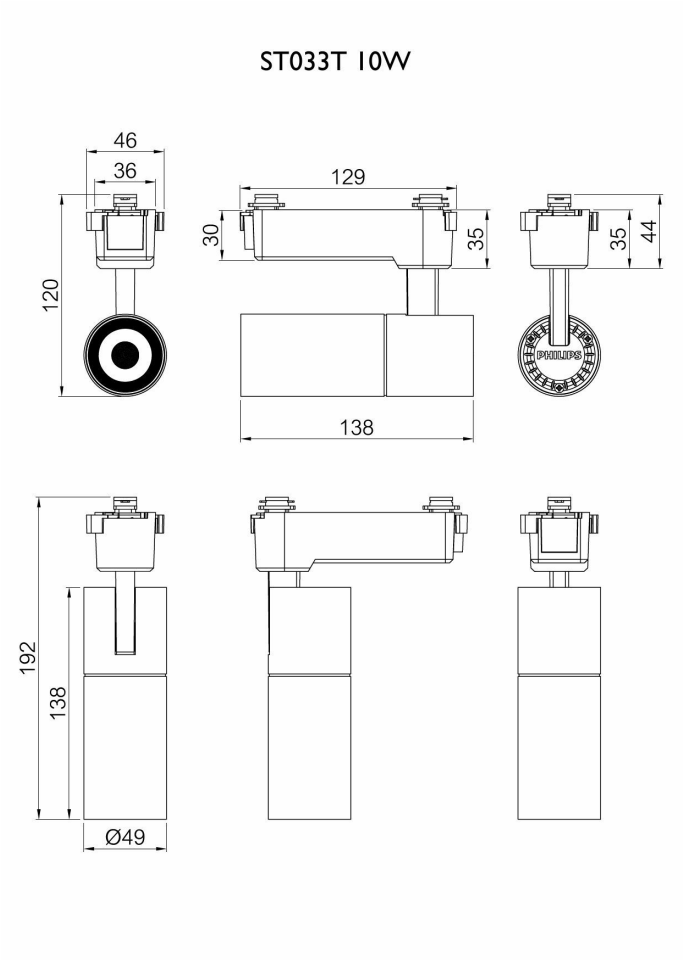

Related Documents

Documents and certificates	Document Name	Download
Installation Instructions	INI_TW ST033T.pdf	Download

Photometry and lighting design	Document Name	Download
IES File	8651352 10W 3000K.IES	Download

© 2026 Signify Holding. All rights reserved. The information provided herein is subject to change, without notice. Signify does not give any representation or warranty as to the accuracy or completeness of the information included herein and shall not be liable for any action in reliance thereon. The information presented in this document is not intended as any commercial offer and does not form part of any quotation or contract, unless otherwise agreed by Signify. Philips and the Philips Shield Emblem are registered trademarks of Koninklijke Philips N.V.