PHILIPS

PrimaVision Power for CDM

DPVPWR



PrimaVision Power (100W & 150W) for CDM - High power packed in a small size

PrimaVision Power gear is designed for optimal performance of 100 and 150 W CDM lamps – ideal where high-intensity light is key.

Benefits

- Optimal lamp performance thanks to minimal lamp power tolerance
- Lamp life increased by up to 30% for CDM lamps
- Eliminates all visible lamp flicker

Applications

- 100 and 150 W: high-bay area, accent and decorative lighting for shops, public spaces, lobbies and offices
- Suitable for indoor use only

Features

- Loop Through feature (in independent version)
- Low gear energy losses
- Lamp end-of-life detection
- High Tambient and Tcase temperatures
- Long lifetime of 40,000 hours

Versions



GPPR_IPVG4U_0003-Product photo

Dimensional drawing

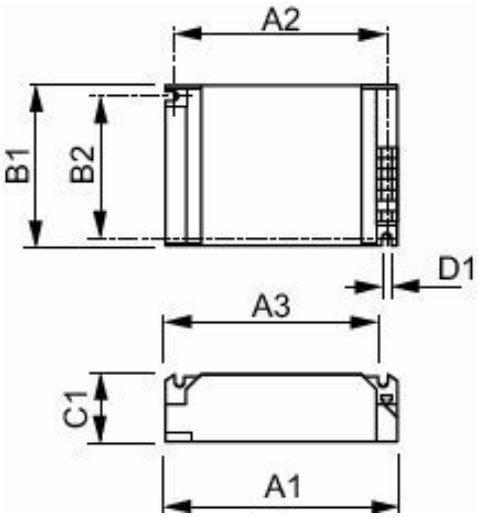

Product	D1	C1	A1	A2	B1	B2
HID-PV C 150 /S CDM 220-240V 50/60Hz	4.8 mm	32.0 mm	135.0 mm	123.5 mm	75.0 mm	63.5 mm

Operating and Electrical

Input Voltage	220 to 240 V
Line Frequency	50 to 60 Hz
Input Frequency	50 to 60 Hz
Number of Products on MCB (16A Type B) (Nom)	6

Mechanical and Housing

Housing	/S

© 2026 Signify Holding. All rights reserved. The information provided herein is subject to change, without notice. Signify does not give any representation or warranty as to the accuracy or completeness of the information included herein and shall not be liable for any action in reliance thereon. The information presented in this document is not intended as any commercial offer and does not form part of any quotation or contract, unless otherwise agreed by Signify. Philips and the Philips Shield Emblem are registered trademarks of Koninklijke Philips N.V.