PHILIPS

WT158C LED25S/840 PSU L1200 GC

911401895180



GreenUp Waterproof, 20 W, 2500 lm, 4000 K

GreenUp Waterproof is a high efficient and reliable LED luminaire, designed for industrial application with humid and dust protection requirement. It delivers significant energy savings of up to 62% as compared to conventional dual-T8 waterproof. Utilization of UV-shield PC and extrusion process makes it suitable for semi-outdoor environments, and together with the built-in breather ensure a sound performance. With professional optic design and Philips LED module gives the most comfortable light experience of CRI 85.

General Information

Driver included	Yes
Light source engine type	LED
Value ladder	Performance

Light Technical

Luminous Flux	2,500 lm
Correlated Color Temperature (Nom)	4000 K
Luminous Efficacy (rated) (Nom)	120 lm/W
Color rendering index (CRI)	>80
Light source color	840 neutral white
Unified glare rating CEN	Not applicable

Operating and Electrical

Input Voltage	220 to 240 V
Line Frequency	50 or 60 Hz
Power Consumption	20 W
Power Factor (Fraction)	0.9
Connection	Push-in connector 2-pole
Number of products on MCB of 16 A type B	1
Protection class IEC	Safety class II

Controls and Dimming

Dimmable	No
Control interface	-

Mechanical and Housing

Housing Material	Polycarbonate
Optical cover material	Polycarbonate
Housing Color	Gray and white
Optical cover finish	Opal
Overall length	1,201 mm
Overall width	69 mm
Overall height	90 mm
Dimensions (Height x Width x Depth)	90 x 69 x 1201 mm
Ingress protection code	IP66 [Dust penetration-protected, jet-proof]
Mech. impact protection code	IK08 [5 J vandal-protected]
Optical cover type	-
Net Weight (Piece)	0.750 kg

Approval and Application

CE mark	No
Ambient temperature range	-20 to +45 °C

Initial Performance (IEC Compliant)

Luminous flux tolerance	+/-10%
Power consumption tolerance	+/-10%

Dimensional drawing

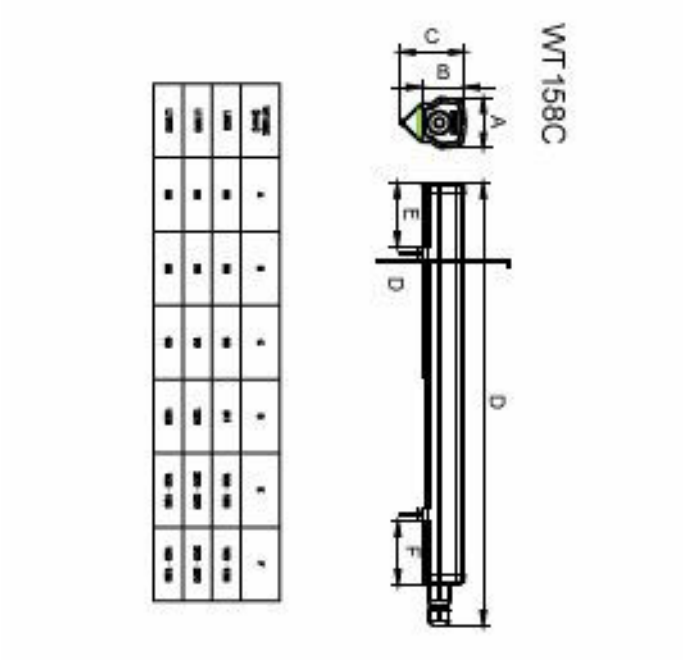

Application Conditions

Lumen Maintenance	30000hrs

Product Data

Order product name	WT158C LED25S/840 PSU L1200 GC
Full product name	WT158C LED25S/840 PSU L1200 GC
Full product code	692382863835199
Order code	911401895180
Material Nr. (12NC)	911401895180
Numerator - Quantity Per Pack	1
EAN/UPC - Product/Case	6923828638351
Numerator - Packs per outer box	12
EAN/UPC - Case	6923828638498

Related Documents

Photometry and lighting design	Document Name	Download
IES File	WT158C-LED25S840-PSU-L1200-GC-updated.ies	Download

© 2026 Signify Holding. All rights reserved. The information provided herein is subject to change, without notice. Signify does not give any representation or warranty as to the accuracy or completeness of the information included herein and shall not be liable for any action in reliance thereon. The information presented in this document is not intended as any commercial offer and does not form part of any quotation or contract, unless otherwise agreed by Signify. Philips and the Philips Shield Emblem are registered trademarks of Koninklijke Philips N.V.