PHILIPS

MSD Platinum (Touring/ Stage)

XDMSDPTS



MSD Platinum – The power to light your creativity

The MSD Platinum lamps open up new levels of creative freedom in entertainment lighting, with powerful, compact and brilliantly intense light. Their compact, lightweight design provides the freedom to create smaller, lighter luminaires – for use at any location on stage. And their short arc, high color temperature and innovative reflector produce a sparkling, high beam intensity for outstanding color reproduction. They also offer long and reliable lifetime, high efficacy and fast replacement times. It all adds up to an intensely exciting creative experience.

Benefits

- High beam intensity
- Freedom to create smaller and lighter fixtures
- High perceived brightness
- A long and reliable performance

Applications

- Events
- Shows/Theater
- Touring/Stage

Features

- Very short arc
- Compact system
- High correlated color temperature
- Philips Platinum technology
- A lamp breaking is extremely unlikely to have any impact on your health. If a lamp breaks, ventilate the room for 30 minutes and remove the parts, preferably with gloves. Put them in a sealed plastic bag and take it to your local waste facilities for recycling. Do not use a vacuum cleaner.

Versions



MSD Platinum 21 R
MSDGLIM2017072



MSD Silver 330W



Standard for MSD Silver 350W



MSD Platinum 200 Flex



XPPR_XDMSD_0002-Product photo



XPPR XDMSD 0003



XPPR_XDMSD_0011-Product photo



XPPR_XDMSD_0012-Product photo





Dimensional drawing

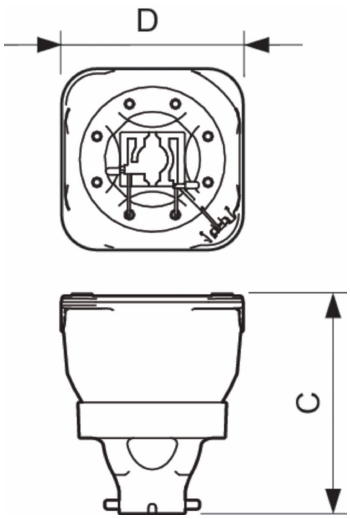

Product	D (max)	O	C (max)
MSD Platinum 19 R LL UNP/24	58.5 mm	72 mm	
MSD Platinum 20 R 1CT/8	58.5 mm	1.2 mm	72 mm
MSD Platinum 20 R UNP/24	58.5 mm	1.2 mm	72 mm
MSD Platinum 20 RB 1CT/8	58.5 mm	1.2 mm	72 mm
MSD Platinum 20 RB UNP/24	58.5 mm	1.2 mm	72 mm
MSD Platinum 500S Flex UNP/24	54.5 mm	1.4 mm	72 mm
MSD Silver 420W LL/24	58.5 mm	1 mm	70 mm
MSD Silver 460W UNP/24	58.5 mm	1.3 mm	72 mm
MSD Silver 480W LL 1CT/8	58.5 mm	1.2 mm	72 mm
MSD Silver 480W LL UNP/24	58.5 mm	1.2 mm	72 mm
MSD Silver 480W/2 LL UNP/24	58.5 mm	1.2 mm	72 mm

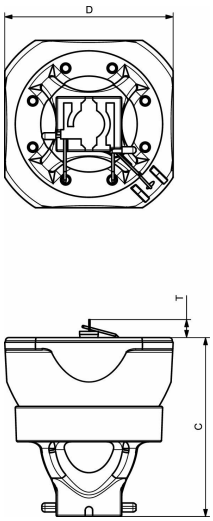

Product	D (max)	O	C (max)
MSD Platinum 21 R 1CT/8	54.5 mm	1.2 mm	60 mm
MSD Platinum 21 R UNP/24	54.5 mm	1.2 mm	60 mm
MSD Platinum 25 R 1CT/8	54.5 mm	1.4 mm	60 mm
MSD Platinum 25 R UNP/24	54.5 mm	1.4 mm	60 mm
MSD Platinum 400L Flex 1CT/8	54.5 mm	1.2 mm	60 mm
MSD Platinum 400L Flex UNP/24	54.5 mm	1.2 mm	60 mm
MSD Platinum 500L Flex 1CT/8	54.5 mm	1.4 mm	60 mm
MSD Platinum 500L Flex UNP/24	54.5 mm	1.4 mm	60 mm

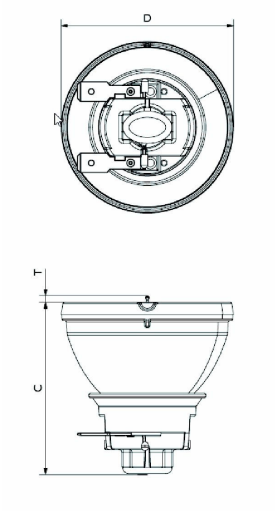

Product	D (max)	O	C (max)	T
MSD Platinum 200 Flex 1CT/8	56.5 mm	0.8 mm	60 mm	7 mm
MSD Platinum 200 Flex UNP/24	56.5 mm	0.8 mm	60 mm	7 mm

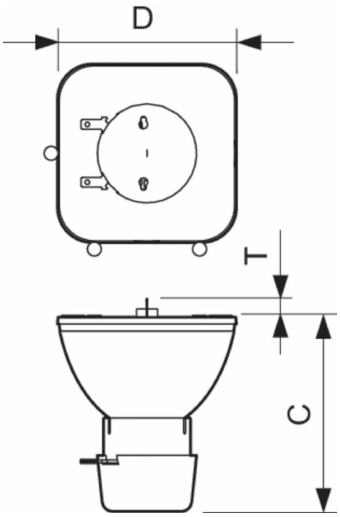

Product	D (max)	T (max)	O	C (max)
MSD Platinum 12 R LL 1CT/8	51.5 mm	6.8 mm	0.95 mm	57.1 mm
MSD Platinum 12 R LL UNP/24	51.5 mm	6.8 mm	0.95 mm	57.1 mm
MSD Platinum 14 R 1CT/8	51.5 mm	6.8 mm	0.95 mm	57.1 mm
MSD Platinum 14 R UNP/24	51.5 mm	6.8 mm	0.95 mm	57.1 mm
MSD Platinum 5 R 1CT/8	51.4 mm	6.8 mm	1.0 mm	57.1 mm
MSD Platinum 5 R UNP/24	51.4 mm	6.8 mm	1.0 mm	57.1 mm

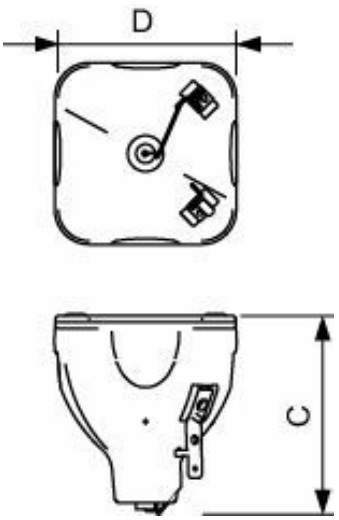

Product	D (max)	O	C (max)
MSD Platinum 15 R 1CT/8	58.5 mm	1.3 mm	66.4 mm
MSD Platinum 15 R UNP/24	58.5 mm	1.3 mm	66.4 mm
MSD Platinum 16 R 1CT/8	58.5 mm	1.3 mm	66.4 mm
MSD Platinum 16 R UNP/24	58.5 mm	1.3 mm	66.4 mm
MSD Platinum 300S Flex 1CT/8	58.5 mm	1.0 mm	66.4 mm
MSD Platinum 300S Flex UNP/24	58.5 mm	1.0 mm	66.4 mm
MSD Silver 330W UNP/24	56.5 mm	1.3 mm	62.6 mm
MSD Silver 350W UNP/24	58.5 mm	1.3 mm	66.4 mm

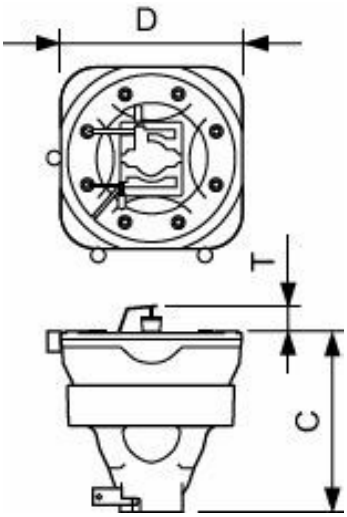

Product	D (max)	T (max)	O	C (max)
MSD Platinum 11 R 1CT/8	51.5 mm	10 mm	0.95 mm	53 mm
MSD Platinum 17 RA 1CT/8	51.4 mm	10.0 mm	1.0 mm	63 mm

General Information

Cap-Base	-
Operating Position	UNIVERSAL [Any or Universal (U)]

Light Technical

Color Code	2

Controls and Dimming

Dimmable	Yes

Light Technical

Order Code	Full Product Name	Luminous Flux (Min)	Luminous Flux	Correlated Color Temperature (Nom)	Color rendering index (CRI)
928197805308	MSD Platinum 21 R UNP/24	-	23,000 lm	8000 K	-
928197805314	MSD Platinum 21 R 1CT/8	-	23,000 lm	8000 K	-
928495505308	MSD Silver 330W UNP/24	-	14,400 lm	8000 K	-
928495605308	MSD Silver 350W UNP/24	-	15,700 lm	8000 K	-
928495705308	MSD Platinum 200 Flex UNP/24	-	14,000 lm	7800 K	-
928495705314	MSD Platinum 200 Flex 1CT/8	-	14,000 lm	7800 K	-
928191605308	MSD Platinum 15 R UNP/24	11,000 lm	13,500 lm	8000 K	-
928191605314	MSD Platinum 15 R 1CT/8	11,000 lm	13,500 lm	8000 K	-
928195205308	MSD Platinum 16 R UNP/24	14,300 lm	16,000 lm	8000 K	-
928195205314	MSD Platinum 16 R 1CT/8	14,300 lm	16,000 lm	8000 K	-
928496305308	MSD Platinum 300S Flex UNP/24	-	22,000 lm	8000 K	-
928496305314	MSD Platinum 300S Flex 1CT/8	-	22,000 lm	8000 K	-
928190805308	MSD Platinum 5 R UNP/24	7,100 lm	7,950 lm	8000 K	-

Order Code	Full Product Name	Luminous Flux (Min)	Luminous Flux	Correlated Color Temperature (Nom)	Color rendering index (CRI)
928190805314	MSD Platinum 5 R 1CT/8	7,100 lm	7,950 lm	8000 K	-
928196105308	MSD Platinum 14 R UNP/24	-	12,350 lm	7800 K	-
928196105314	MSD Platinum 14 R 1CT/8	-	12,350 lm	7800 K	-
928496705308	MSD Platinum 12 R LL UNP/24	15,000 lm	17,100 lm	7800 K	-
928496705314	MSD Platinum 12 R LL 1CT/8	15,000 lm	17,100 lm	7800 K	-
928191705314	MSD Platinum 11 R 1CT/8	-	12,000 lm	7800 K	-
928197305314	MSD Platinum 17 RA 1CT/8	-	15,250 lm	7000 K	85
928197205308	MSD Platinum 20 R UNP/24	-	22,400 lm	8000 K	-
928197205314	MSD Platinum 20 R 1CT/8	-	22,400 lm	8000 K	-
928495205308	MSD Platinum 20 RB UNP/24	-	22,400 lm	8000 K	-
928495205314	MSD Platinum 20 RB 1CT/8	-	22,400 lm	8000 K	-
928498205308	MSD Platinum 500S Flex UNP/24	-	33,000 lm	8000 K	-
928498705308	MSD Platinum 19 R LL UNP/24	-	23,000 lm	8000 K	-
928496105308	MSD Silver 460W UNP/24	-	20,000 lm	7800 K	-
928498305308	MSD Silver 480W LL UNP/24	-	25,000 lm	7800 K	-
928498305314	MSD Silver 480W LL 1CT/8	-	25,000 lm	7800 K	-
928498605308	MSD Silver 480W/2 LL UNP/24	-	26,000 lm	7800 K	-
928499005308	MSD Silver 420W LL/24	-	23,000 lm	8000 K	-
928495905308	MSD Platinum 25 R UNP/24	-	26,000 lm	8000 K	-
928495905314	MSD Platinum 25 R 1CT/8	-	26,000 lm	8000 K	-
928496405308	MSD Platinum 400L Flex UNP/24	-	24,000 lm	8000 K	-
928496405314	MSD Platinum 400L Flex 1CT/8	-	24,000 lm	8000 K	-
928498105308	MSD Platinum 500L Flex UNP/24	-	26,000 lm	8000 K	-
928498105314	MSD Platinum 500L Flex 1CT/8	-	26,000 lm	8000 K	-

Operating and Electrical

Order Code	Full Product Name	Power Consumption
928197805308	MSD Platinum 21 R UNP/24	470 W
928197805314	MSD Platinum 21 R 1CT/8	470 W
928495505308	MSD Silver 330W UNP/24	330 W
928495605308	MSD Silver 350W UNP/24	350 W
928495705308	MSD Platinum 200 Flex UNP/24	240 W
928495705314	MSD Platinum 200 Flex 1CT/8	240 W
928191605308	MSD Platinum 15 R UNP/24	300 W
928191605314	MSD Platinum 15 R 1CT/8	300 W
928195205308	MSD Platinum 16 R UNP/24	330 W
928195205314	MSD Platinum 16 R 1CT/8	330 W
928496305308	MSD Platinum 300S Flex UNP/24	370 W
928496305314	MSD Platinum 300S Flex 1CT/8	370 W
928190805308	MSD Platinum 5 R UNP/24	189 W

Order Code	Full Product Name	Power Consumption
928190805314	MSD Platinum 5 R 1CT/8	189 W
928196105308	MSD Platinum 14 R UNP/24	280 W
928196105314	MSD Platinum 14 R 1CT/8	280 W
928496705308	MSD Platinum 12 R LL UNP/24	260 W
928496705314	MSD Platinum 12 R LL 1CT/8	260 W
928191705314	MSD Platinum 11 R 1CT/8	250 W
928197305314	MSD Platinum 17 RA 1CT/8	350.0 W
928197205308	MSD Platinum 20 R UNP/24	470 W
928197205314	MSD Platinum 20 R 1CT/8	470 W
928495205308	MSD Platinum 20 RB UNP/24	470 W
928495205314	MSD Platinum 20 RB 1CT/8	470 W
928498205308	MSD Platinum 500S Flex UNP/24	550 W
928498705308	MSD Platinum 19 R LL UNP/24	420 W
928496105308	MSD Silver 460W UNP/24	460 W
928498305308	MSD Silver 480W LL UNP/24	480 W
928498305314	MSD Silver 480W LL 1CT/8	480 W
928498605308	MSD Silver 480W/2 LL UNP/24	480 W
928499005308	MSD Silver 420W LL/24	420 W
928495905308	MSD Platinum 25 R UNP/24	550 W
928495905314	MSD Platinum 25 R 1CT/8	550 W
928496405308	MSD Platinum 400L Flex UNP/24	470 W
928496405314	MSD Platinum 400L Flex 1CT/8	470 W
928498105308	MSD Platinum 500L Flex UNP/24	550 W
928498105314	MSD Platinum 500L Flex 1CT/8	550 W

© 2026 Signify Holding. All rights reserved. The information provided herein is subject to change, without notice. Signify does not give any representation or warranty as to the accuracy or completeness of the information included herein and shall not be liable for any action in reliance thereon. The information presented in this document is not intended as any commercial offer and does not form part of any quotation or contract, unless otherwise agreed by Signify. Philips and the Philips Shield Emblem are registered trademarks of Koninklijke Philips N.V.