PHILIPS

BY300P LED 37S CW PSU S1 PC SPD

919515812332



An Energy efficient Well Glass for Industrial and commercial application

DuraLED well glass is designed to replace traditional Well Glass up to 70W with only 50% of the load for similar illumination. It is a perfect LED solution for outdoor application and industry of harsh condition like power plant, metal, and non-hazardous area in chemical and petrochemical industry. Compared to conventional HID Well Glass, it improves reliability, comfort, while reducing energy and maintenance cost dramatically. DuraLED Well Glass comes with 2 different mounting, Wall bracket (2 types) & Eye-bolt and comes with 2 color temperature and 2 lumen outputs.

Warnings and Safety

- Meant for use in Indoor Industrial environment only

General Information

Driver included	Yes
Light source engine type	LED
Warranty period	2 years

Light Technical

Luminous Flux	3,700 lm
Correlated Color Temperature (Nom)	6500 K
Luminous Efficacy (rated) (Nom)	120 lm/W
Color rendering index (CRI)	>80
Beam angle of light source	120 degree(s)
Light source color	865 cool daylight

Optic type	Beam angle 120°
Luminaire light beam spread	120°

Operating and Electrical

Input Voltage	120 to 277 V
Line Frequency	50 Hz
Power Consumption	33 W
Power Factor (Fraction)	0.95
Protection class IEC	Safety class I
Surge Protection (Common/ Differential)	Surge protection level until 4 kV

Controls and Dimming

Dimmable	No
Control interface	-

Mechanical and Housing

Housing Material	Aluminium pressure die cast
Optic material	Polycarbonate
Optical cover material	Polycarbonate
Housing Color	Gray
Mounting device	Wall-mounting bracket
Material	Aluminum
Ingress protection code	IP65 [Dust penetration-protected, jet-proof]
Mech. impact protection code	IK08 [5 J vandal-protected]

Dimensional drawing

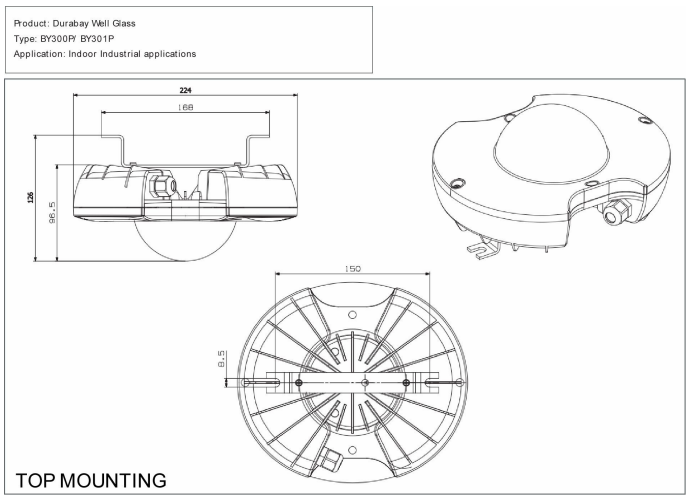

Optical cover type	Opal diffuser in polycarbonate cover
Net Weight (Piece)	1.000 kg

Approval and Application

Flammability mark	For mounting on normally flammable surfaces
Ambient temperature range	0 to +45 °C

Initial Performance (IEC Compliant)

Initial chromaticity	SDCM<5
Power consumption tolerance	+/-10%

Over Time Performance (IEC Compliant)

Median useful life L70B50	50,000 hour(s)

Product Data

Order product name	BY300P LED 37S CW PSU S1 PC SPD
Full product name	BY300P LED 37S CW PSU S1 PC SPD
Order code	919515812332
Material Nr. (12NC)	919515812332
Numerator - Quantity Per Pack	1
Numerator - Packs per outer box	1

Related Documents

Documents and certificates	Document Name	Download
Installation Instructions	DuraLED_ Well Glass-BY300P-INI.pdf	Download

Photometry and lighting design	Document Name	Download
IES File	DuraLED_BY300P LED 37S CW PSU S1 PC SPD.ies	Download

© 2026 Signify Holding. All rights reserved. The information provided herein is subject to change, without notice. Signify does not give any representation or warranty as to the accuracy or completeness of the information included herein and shall not be liable for any action in reliance thereon. The information presented in this document is not intended as any commercial offer and does not form part of any quotation or contract, unless otherwise agreed by Signify. Philips and the Philips Shield Emblem are registered trademarks of Koninklijke Philips N.V.