PHILIPS

WT120C G3 40S/840 PSU WEC3 TW1 L1200

911401837188



Service tag

CoreLine waterproof gen3, 25 W, L1200 mm, 4000 lm, 4000 K, Symmetrical, Clear, IP66, IK08, TW1, EL-ready

L1200 mm, Polycarbonate, Grey, Power supply unit (On/Off), 4000 lm, 25 W, 160 lm/W, 4000 K, (0.38, 0.37) SDCM<3, Symmetrical, Clear, Polycarbonate, IP66 | Dust penetration-protected, jet-proof, IK08 | 6 J, Safety class I, Waterproof External plug-in connector 3-pole, Feed-through wiring 1-phase, Self-contained emergency lighting is possible when used with a compatible battery kit accessory

Warnings and Safety

- UV radiation will damage the material over time resulting in loss of waterproof sealing and IP66 rating.
- Do not install the luminaire in locations where it will be exposed to direct sunlight.

General Information

Light source replaceable	Yes
Number of gear units	1 unit
Driver included	Yes
Sustainability rating	Unclassified
Service tag	Yes
Value ladder	Performance
Warranty period	5 years

Light Technical

Luminous Flux	4,000 lm
Correlated Color Temperature (Nom)	4000 K
Luminous Efficacy (rated) (Nom)	160 lm/W
Color rendering index (CRI)	>80
Light source color	840 neutral white
Optic type	Symmetrical
Luminaire light beam spread	110°
Unified glare rating CEN	25

Operating and Electrical

Input Voltage	220-240 V
Line Frequency	0/50/60 Hz
Inrush current	24.5 A
Inrush time	0.136 ms
Power Consumption	25 W
Power Factor (Fraction)	0.95
Connection	Waterproof External plug-in connector 3-pole
Cable	-
Number of products on MCB of 16 A type B	35
Suitable for random switching	Yes
Protection class IEC	Safety class I
Feed-through wiring	Feed-through wiring 1-phase

Controls and Dimming

Dimmable	No
Driver/power unit/transformer	Power supply unit (On/Off)
Constant light output	No

Mechanical and Housing

Housing Material	Polycarbonate
Reflector material	Steel
Optic material	Polycarbonate
Optical cover material	Polycarbonate
Fixation material	Stainless steel
Housing Color	Grey
Optical cover finish	Clear
Overall length	1,285 mm
Overall width	80 mm
Overall height	76 mm
Dimensions (Height x Width x Depth)	76 x 80 x 1285 mm
Ingress protection code	IP66 [Dust penetration-protected, jet-proof]
Mech. impact protection code	IK08 [6 J]
Net Weight (Piece)	1.350 kg

Emergency Operation

Central Emergency	No
Emergency lighting	Self-contained emergency lighting is possible when used with a compatible battery kit accessory

Approval and Application

Glow-wire test	Temperature 850 °C, duration 30 s
Flammability mark	For mounting on normally flammable surfaces
CE mark	Yes
ENEC mark	ENEC mark
Photobiological risk	Photobiological risk group 0 @200mm to EN62778
EU RoHS compliant	Yes
Performance ambient temperature Tq	25 °C
Stroboscopic effect visibility measure (SVM)	0.4
Ambient temperature range	-20 to +40 °C

Initial Performance (IEC Compliant)

Luminous flux tolerance	+15%/-5%
Initial chromaticity	(0.38, 0.37) SDCM<3
Power consumption tolerance	+/-10%

Over Time Performance (IEC Compliant)

Control gear failure rate at median useful life 50000 h	5 %
Control gear failure rate at median useful life 100000 h	10 %
Lumen maintenance (EN-IEC 62722-2-1) at median useful life* 50000 h	L90
Lumen maintenance (EN-IEC 62722-2-1) at median useful life* 100000 h	L80

Sustainability Data

Repair class	Repair Class B, the driver and light source of this luminaire can be replaced by a service technician. Parts and documentation are available for an extended period of time.
Embedded carbon (A1-A3)	13 kg CO_2e
Product non-virgin material ratio	10.8 %
Recyclable content ratio of the finished product	25.1 %
GWP total B6 (kg CO2eq) Declared Unit	Please calculate using your local energy mix value: Power Declared Unit (kW) * Service life (hrs) Declared Unit * Energy mix (kg CO2eq / kwh)
GWP total B6 (kg CO2eq) Functional Unit	Please calculate using your local energy mix value: Power Declared Unit (kW) * 1000 (lm) /lumen output (lm) Declared Unit * 35000 (hrs) * Energy mix (kg CO2 eq / kwh)
Non-virgin material ratio of the packaging	Cardboard > 80% recycled
Packaging Recyclable content ratio	Cardboard recycling rate > 80%
Packaging Material	Cardboard

Product Data

Order product name	WT120C G3 40S/840 PSU WEC3 TW1 L1200
Full product name	WT120C G3 40S/840 PSU WEC3 TW1 L1200
Full product code	872110333322399
Order code	911401837188
Material Nr. (12NC)	911401837188
Numerator - Quantity Per Pack	1
EAN/UPC - Product/Case	8721103333223
Numerator - Packs per outer box	9
EAN/UPC - Case	8721103334152

Dimensional drawing

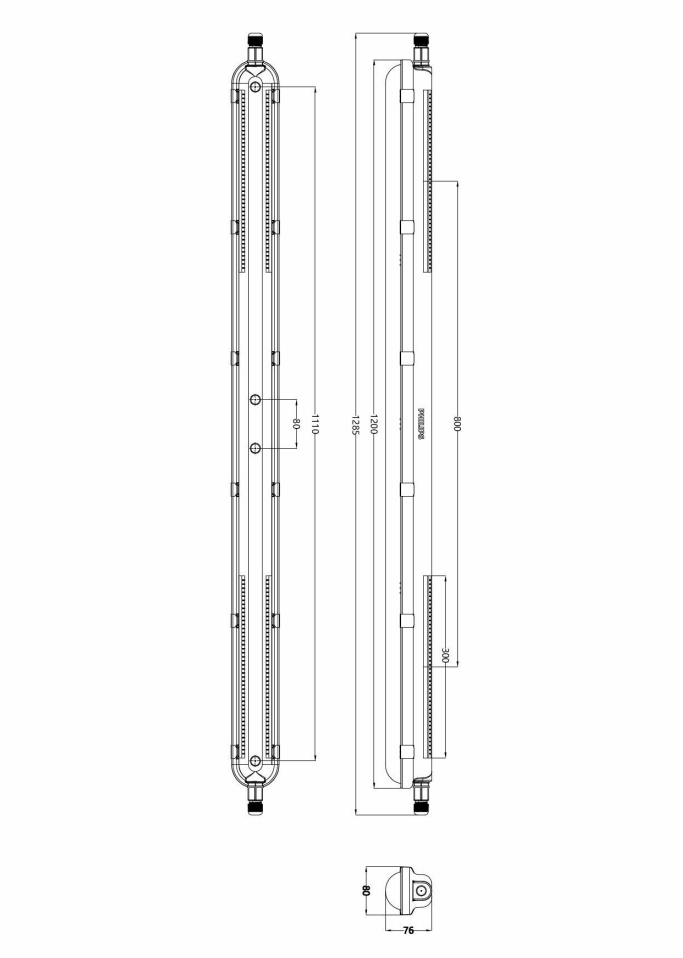

Polar normal diagrams

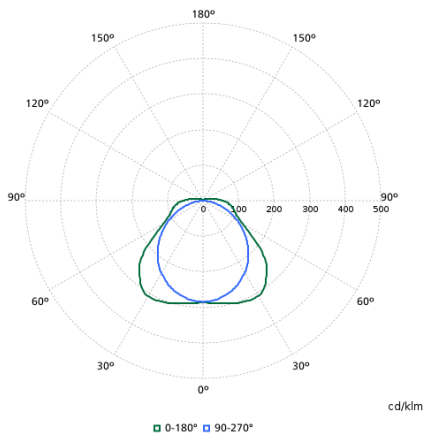

Related Documents

Documents and certificates	Document Name	Download
Installation Instructions	CoreLine-waterproof-G3-Installation-Instruction-v202512.pdf	Download
Environmental Product Declaration	EPD-HUB-EPD-PHILIPS-WT120C-G3-L1200-Ref-911401835788.pdf	Download

Photometry and lighting design	Document Name	Download
IES File	wt120c-g3-40s-840-psu-wec3-tw1-l1200-911401837188.ies	Download
LDT File	wt120c-g3-40s-840-psu-wec3-tw1-l1200-911401837188.ldt	Download
ROLF File	wt120c-g3-40s-840-psu-wec3-tw1-l1200-911401837188.rolfz	Download
ULD File	wt120c-g3-40s-840-psu-wec3-tw1-l1200-911401837188.uld	Download
Revit file	wt120c-g3-40s-840-psu-wec3-tw1-l1200-911401837188.zip	Download

© 2026 Signify Holding. All rights reserved. The information provided herein is subject to change, without notice. Signify does not give any representation or warranty as to the accuracy or completeness of the information included herein and shall not be liable for any action in reliance thereon. The information presented in this document is not intended as any commercial offer and does not form part of any quotation or contract, unless otherwise agreed by Signify. Philips and the Philips Shield Emblem are registered trademarks of Koninklijke Philips N.V.