PHILIPS

GreenPerform Elite Highbay G2

BY778



GreenPerform Elite Highbay G2: A versatile highbay LED luminaire with future-proof connectivity and UltraEfficient options

GreenPerform Elite Highbay G2 is the latest innovation in our successful range of highbay luminaires for high ceiling and industrial applications. GreenPerform Elite Highbay G2 improves on the unique finless housing and flat optics design of earlier versions of the luminaire. Its clean and appealing aesthetic works perfectly in industrial application as well as high-ceiling applications in airports, lobbies, and other indoor areas. This versatile luminaire offers a wealth of practical features, including great light quality, exceptional energy savings, a long lifetime at an affordable price, and a wide variety of optics and lumen packages. GreenPerform Elite Highbay G2 also offers options for advanced connectivity with IoT-based systems and software applications, including Interact Pro. If you're looking for a robust, reliable, fit-and-forget solution with connectivity advantages, GreenPerform Elite Highbay G2 is the smart choice.

Benefits

- Unique aesthetics with superior light quality
- Robust and reliable, with a long service life
- Comes in UltraEfficient versions with high efficacy and exceptional energy savings
- Wide range of lumen packages and optics offers extensive application options
- Ready to connect to cloud-based IoT software applications, including Interact Pro

Applications

- Warehouses
- Manufacturing
- Food processing
- Airports
- Lobbies

Features

- UltraEfficient versions delivers efficacy 190lm/W, and up to 200lm/W based on optional config.
- Long service life of 100,000 hours (L70B50 @Ta 35^{0}C)
- Extensive range of lumen packages from 10,000 lm to 40,000 lm
- Flicker-free light, UGR25 on WB and UGR22 on NB for superior visual comfort
- High ingress protection rating of IP66 and impact protection rating of IK08
- Wide variety of optics for a range of applications
- Suitable for chain, pipe and surface mounting

Versions



GreenPerform Elite Highbay G2

Dimensional drawing

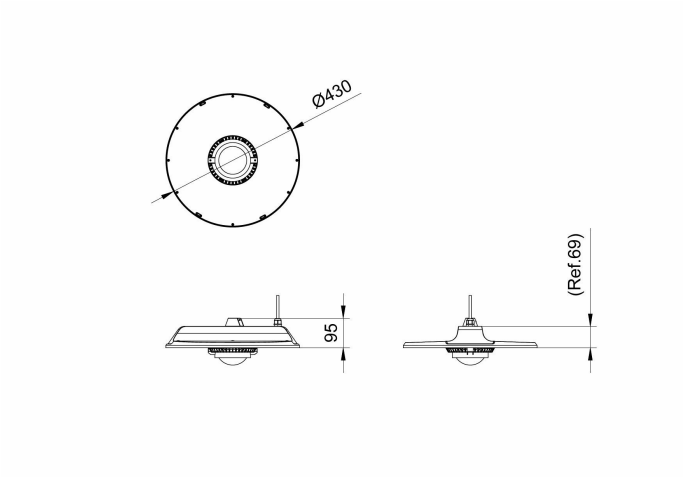

BY778X LED250/CW SIA WB

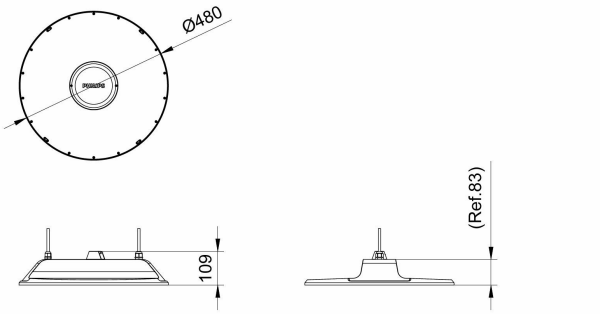

BY778P LED350/NW PSD WB

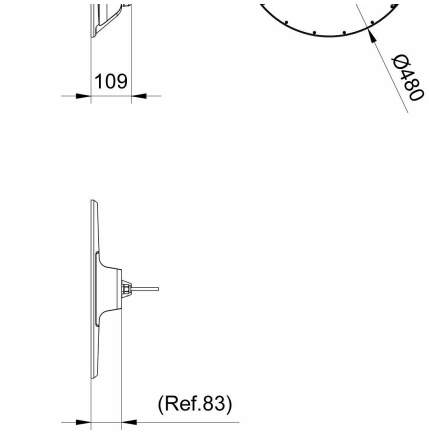

BY778P LED350/965 PSU NB CAU

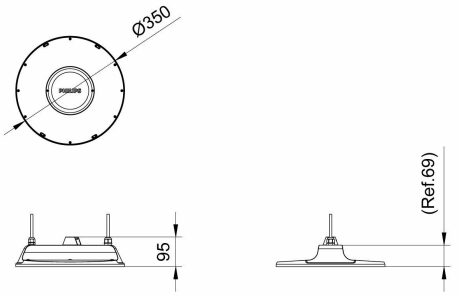

BY778P LED175/940 PSD WB CAU

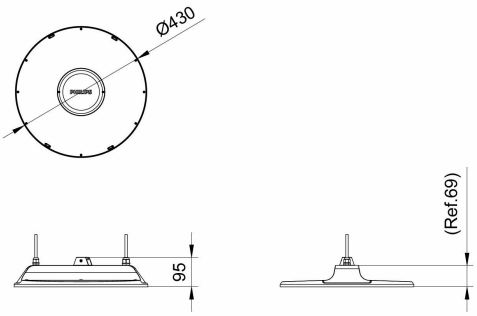

BY778P LED220/940 PSD NB CAU

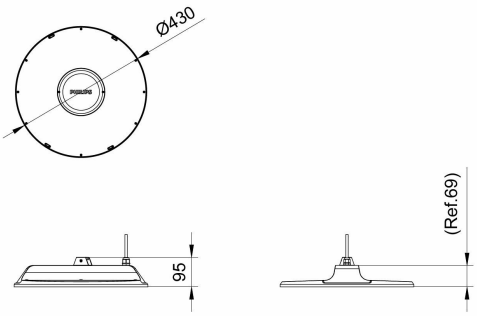

BY778P LED250/CW PSU NB

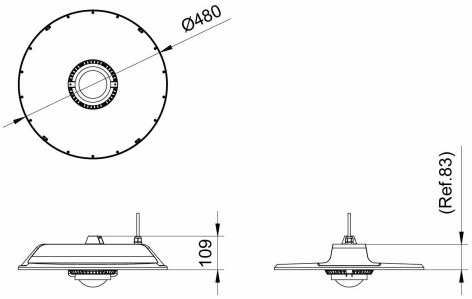

BY778X LED310/965 SIA WB CAU

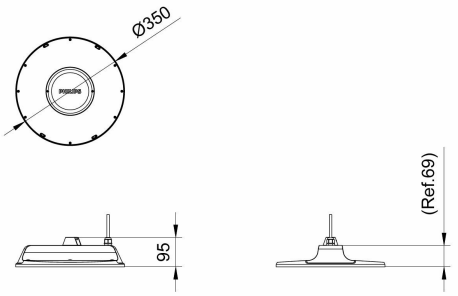

BY778P LED200/NW PSU WB

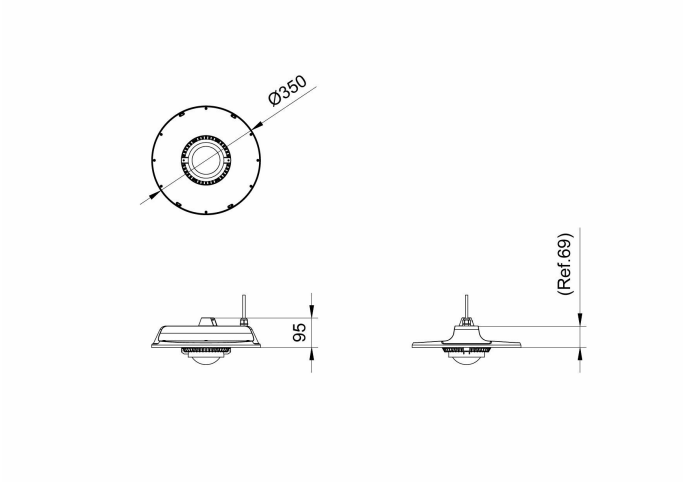

BY778X LED100/NW SIA WB

General Information

Number of gear units	1 unit
Driver included	Yes
Service tag	Yes

Light Technical

Number of light sources	1

Operating and Electrical

Line Frequency	50 to 60 Hz
Protection class IEC	Safety class I

Controls and Dimming

Maximum dim level	Not applicable

Mechanical and Housing

Housing Color	Gray
Optical cover type	Polycarbonate

Approval and Application

Glow-wire test	Temperature 650 °C, duration 30 s
Flammability mark	-
CE mark	Yes
ENEC mark	-

Initial Performance (IEC Compliant)

Luminous flux tolerance	-10% / +10%

General Information

Order Code	Full Product Name	Gear
911401500048	BY778P LED175/940 PSU WB CAU	-
911401500148	BY778P LED175/940 PSU NB CAU	-
911401500248	BY778P LED175/965 PSU WB CAU	-
911401500348	BY778P LED175/965 PSU NB CAU	-
911401500448	BY778P LED220/940 PSU WB CAU	-
911401500548	BY778P LED220/940 PSU NB CAU	-
911401500648	BY778P LED220/965 PSU WB CAU	-
911401500748	BY778P LED220/965 PSU NB CAU	-
911401500848	BY778P LED260/940 PSU WB CAU	-
911401500948	BY778P LED260/940 PSU NB CAU	-
911401501048	BY778P LED260/965 PSU WB CAU	-
911401501148	BY778P LED260/965 PSU NB CAU	-
911401501248	BY778P LED310/940 PSU WB CAU	-
911401501348	BY778P LED310/940 PSU NB CAU	-
911401501448	BY778P LED310/965 PSU WB CAU	-
911401501548	BY778P LED310/965 PSU NB CAU	-
911401501648	BY778P LED350/940 PSU WB CAU	-
911401501748	BY778P LED350/940 PSU NB CAU	-
911401501848	BY778P LED350/965 PSU WB CAU	-
911401501948	BY778P LED350/965 PSU NB CAU	-
911401502048	BY778P LED175/940 PSD WB CAU	-
911401502148	BY778P LED175/940 PSD NB CAU	-
911401502248	BY778P LED175/965 PSD WB CAU	-
911401502348	BY778P LED175/965 PSD NB CAU	-
911401502448	BY778P LED220/940 PSD WB CAU	-
911401502548	BY778P LED220/940 PSD NB CAU	-
911401502648	BY778P LED220/965 PSD WB CAU	-
911401502748	BY778P LED220/965 PSD NB CAU	-
911401502848	BY778P LED260/940 PSD WB CAU	-
911401502948	BY778P LED260/940 PSD NB CAU	-
911401503048	BY778P LED260/965 PSD WB CAU	-
911401503148	BY778P LED260/965 PSD NB CAU	-
911401503248	BY778P LED310/940 PSD WB CAU	-
911401503348	BY778P LED310/940 PSD NB CAU	-
911401503448	BY778P LED310/965 PSD WB CAU	-
911401503548	BY778P LED310/965 PSD NB CAU	-
911401503648	BY778P LED350/940 PSD WB CAU	-
911401503748	BY778P LED350/940 PSD NB CAU	-
911401503848	BY778P LED350/965 PSD WB CAU	-
911401503948	BY778P LED350/965 PSD NB CAU	-
911401504048	BY778X LED175/940 SIA WB CAU	-

Order Code	Full Product Name	Gear
911401504148	BY778X LED175/940 SIA NB CAU	-
911401504248	BY778X LED175/965 SIA WB CAU	-
911401504348	BY778X LED175/965 SIA NB CAU	-
911401504448	BY778X LED220/940 SIA WB CAU	-
911401504548	BY778X LED220/940 SIA NB CAU	-
911401504648	BY778X LED220/965 SIA WB CAU	-
911401504748	BY778X LED220/965 SIA NB CAU	-
911401504848	BY778X LED260/940 SIA WB CAU	-
911401504948	BY778X LED260/940 SIA NB CAU	-
911401505048	BY778X LED260/965 SIA WB CAU	-
911401505148	BY778X LED260/965 SIA NB CAU	-
911401505248	BY778X LED310/940 SIA WB CAU	-
911401505348	BY778X LED310/940 SIA NB CAU	-
911401505448	BY778X LED310/965 SIA WB CAU	-
911401505548	BY778X LED310/965 SIA NB CAU	-
911401505648	BY778X LED350/940 SIA WB CAU	-
911401505748	BY778X LED350/940 SIA NB CAU	-
911401505848	BY778X LED350/965 SIA WB CAU	-
911401505948	BY778X LED350/965 SIA NB CAU	-
911401506048	BY778P LED200/850 PSD WB JP	-
911401506148	BY778P LED400/850 PSD WB JP	-
911401506248	BY778P LED105/TNW PSD WB	-
911401506348	BY778P LED150/TNW PSD WB	-
911401506448	BY778P LED200/TNW PSD WB	-
911401506548	BY778P LED255/TNW PSD WB	-
911401594447	BY778P LED100/NW PSD WB	-
911401594547	BY778P LED100/NW PSD NB	-
911401594647	BY778P LED100/CW PSD WB	-
911401594747	BY778P LED100/CW PSD NB	-
911401594847	BY778P LED150/NW PSD WB	-
911401594947	BY778P LED150/NW PSD NB	-
911401595047	BY778P LED150/CW PSD WB	-
911401595147	BY778P LED150/CW PSD NB	-
911401595247	BY778P LED200/NW PSD WB	-
911401595347	BY778P LED200/NW PSD NB	-
911401595447	BY778P LED200/CW PSD WB	-
911401595547	BY778P LED200/CW PSD NB	-
911401595647	BY778P LED250/NW PSD WB	-
911401595747	BY778P LED250/NW PSD NB	-
911401595847	BY778P LED250/CW PSD WB	-
911401595947	BY778P LED250/CW PSD NB	-
911401596047	BY778P LED300/NW PSD WB	-

Order Code	Full Product Name	Gear
911401596147	BY778P LED300/NW PSD NB	-
911401596247	BY778P LED300/CW PSD WB	-
911401596347	BY778P LED300/CW PSD NB	-
911401596447	BY778P LED350/NW PSD WB	-
911401596547	BY778P LED350/NW PSD NB	-
911401596647	BY778P LED350/CW PSD WB	-
911401596747	BY778P LED350/CW PSD NB	-
911401596847	BY778P LED400/NW PSD WB	-
911401596947	BY778P LED400/NW PSD NB	-
911401597047	BY778P LED400/CW PSD WB	-
911401597147	BY778P LED400/CW PSD NB	-
911401597247	BY778X LED100/NW SIA WB	-
911401597347	BY778X LED100/NW SIA NB	-
911401597447	BY778X LED100/CW SIA WB	-
911401597547	BY778X LED100/CW SIA NB	-
911401597647	BY778X LED150/NW SIA WB	-
911401597747	BY778X LED150/NW SIA NB	-
911401597847	BY778X LED150/CW SIA WB	-
911401597947	BY778X LED150/CW SIA NB	-
911401598047	BY778X LED200/NW SIA WB	-
911401598147	BY778X LED200/NW SIA NB	-
911401598247	BY778X LED200/CW SIA WB	-
911401598347	BY778X LED200/CW SIA NB	-
911401598447	BY778X LED250/NW SIA WB	-
911401598547	BY778X LED250/NW SIA NB	-
911401598647	BY778X LED250/CW SIA WB	-
911401598747	BY778X LED250/CW SIA NB	-
911401598847	BY778X LED300/NW SIA WB	-
911401598947	BY778X LED300/NW SIA NB	-
911401599047	BY778X LED300/CW SIA WB	-
911401599147	BY778X LED300/CW SIA NB	-
911401599247	BY778X LED350/NW SIA WB	-
911401599347	BY778X LED350/NW SIA NB	-
911401599447	BY778X LED350/CW SIA WB	-
911401599547	BY778X LED350/CW SIA NB	-
911401599647	BY778X LED400/NW SIA WB	-
911401599747	BY778X LED400/NW SIA NB	-
911401599847	BY778X LED400/CW SIA WB	-
911401599947	BY778X LED400/CW SIA NB	-
911401620609	BY778P LED100/NW PSU WB	EBR
911401620709	BY778P LED100/NW PSU NB	EBR
911401620809	BY778P LED100/CW PSU WB	EBR

Order Code	Full Product Name	Gear
911401620909	BY778P LED100/CW PSU NB	EBR
911401621009	BY778P LED150/NW PSU WB	EBR
911401621109	BY778P LED150/NW PSU NB	EBR
911401621209	BY778P LED150/CW PSU WB	EBR
911401621309	BY778P LED150/CW PSU NB	EBR
911401621409	BY778P LED200/NW PSU WB	EBR
911401621509	BY778P LED200/NW PSU NB	EBR
911401621609	BY778P LED200/CW PSU WB	EBR
911401621709	BY778P LED200/CW PSU NB	EBR
911401621809	BY778P LED250/NW PSU WB	EBR
911401621909	BY778P LED250/NW PSU NB	EBR
911401622009	BY778P LED250/CW PSU WB	EBR
911401622109	BY778P LED250/CW PSU NB	EBR
911401622209	BY778P LED300/NW PSU WB	EBR
911401622309	BY778P LED300/NW PSU NB	EBR
911401622409	BY778P LED300/CW PSU WB	EBR
911401622509	BY778P LED300/CW PSU NB	EBR
911401622609	BY778P LED350/NW PSU WB	EBR
911401622709	BY778P LED350/NW PSU NB	EBR
911401622809	BY778P LED350/CW PSU WB	EBR
911401622909	BY778P LED350/CW PSU NB	EBR
911401623009	BY778P LED400/NW PSU WB	EBR
911401623109	BY778P LED400/NW PSU NB	EBR
911401623209	BY778P LED400/CW PSU WB	EBR
911401623309	BY778P LED400/CW PSU NB	EBR

Light Technical

Order Code	Full Product Name	Luminous Flux	Correlated Color Temperature (Nom)	Luminous Efficacy (rated) (Nom)	Color rendering index (CRI)	Beam angle of light source	Optic type
911401500048	BY778P LED175/940 PSU WB CAU	17,500 lm	4000 K	167 lm/W	90	90 degree(s)	Beam angle 90°
911401500148	BY778P LED175/940 PSU NB CAU	17,500 lm	4000 K	167 lm/W	90	55 degree(s)	Beam angle 55°
911401500248	BY778P LED175/965 PSU WB CAU	17,500 lm	6500 K	167 lm/W	90	90 degree(s)	Beam angle 90°
911401500348	BY778P LED175/965 PSU NB CAU	17,500 lm	6500 K	167 lm/W	90	55 degree(s)	Beam angle 55°
911401500448	BY778P LED220/940 PSU WB CAU	22,000 lm	4000 K	169 lm/W	90	90 degree(s)	Beam angle 90°
911401500548	BY778P LED220/940 PSU NB CAU	22,000 lm	4000 K	169 lm/W	90	55 degree(s)	Beam angle 55°
911401500648	BY778P LED220/965 PSU WB CAU	22,000 lm	6500 K	169 lm/W	90	90 degree(s)	Beam angle 90°
911401500748	BY778P LED220/965 PSU NB CAU	22,000 lm	6500 K	169 lm/W	90	55 degree(s)	Beam angle 55°
911401500848	BY778P LED260/940 PSU WB CAU	26,000 lm	4000 K	168 lm/W	90	90 degree(s)	Beam angle 90°
911401500948	BY778P LED260/940 PSU NB CAU	26,000 lm	4000 K	168 lm/W	90	55 degree(s)	Beam angle 55°
911401501048	BY778P LED260/965 PSU WB CAU	26,000 lm	6500 K	168 lm/W	90	90 degree(s)	Beam angle 90°

Order Code	Full Product Name	Luminous Flux	Correlated Color Temperature (Nom)	Luminous Efficacy (rated) (Nom)	Color rendering index (CRI)	Beam angle of light source	Optic type
911401501148	BY778P LED260/965 PSU NB CAU	26,000 lm	6500 K	168 lm/W	90	55 degree(s)	Beam angle 55°
911401501248	BY778P LED310/940 PSU WB CAU	31,000 lm	4000 K	168 lm/W	90	90 degree(s)	Beam angle 90°
911401501348	BY778P LED310/940 PSU NB CAU	31,000 lm	4000 K	168 lm/W	90	55 degree(s)	Beam angle 55°
911401501448	BY778P LED310/965 PSU WB CAU	31,000 lm	6500 K	168 lm/W	90	90 degree(s)	Beam angle 90°
911401501548	BY778P LED310/965 PSU NB CAU	31,000 lm	6500 K	168 lm/W	90	55 degree(s)	Beam angle 55°
911401501648	BY778P LED350/940 PSU WB CAU	35,000 lm	4000 K	167 lm/W	90	90 degree(s)	Beam angle 90°
911401501748	BY778P LED350/940 PSU NB CAU	35,000 lm	4000 K	167 lm/W	90	55 degree(s)	Beam angle 55°
911401501848	BY778P LED350/965 PSU WB CAU	35,000 lm	6500 K	167 lm/W	90	90 degree(s)	Beam angle 90°
911401501948	BY778P LED350/965 PSU NB CAU	35,000 lm	6500 K	167 lm/W	90	55 degree(s)	Beam angle 55°
911401502048	BY778P LED175/940 PSD WB CAU	17,500 lm	4000 K	167 lm/W	90	90 degree(s)	Beam angle 90°
911401502148	BY778P LED175/940 PSD NB CAU	17,500 lm	4000 K	167 lm/W	90	55 degree(s)	Beam angle 55°
911401502248	BY778P LED175/965 PSD WB CAU	17,500 lm	6500 K	167 lm/W	90	90 degree(s)	Beam angle 90°
911401502348	BY778P LED175/965 PSD NB CAU	17,500 lm	6500 K	167 lm/W	90	55 degree(s)	Beam angle 55°
911401502448	BY778P LED220/940 PSD WB CAU	22,000 lm	4000 K	169 lm/W	90	90 degree(s)	Beam angle 90°
911401502548	BY778P LED220/940 PSD NB CAU	22,000 lm	4000 K	169 lm/W	90	55 degree(s)	Beam angle 55°
911401502648	BY778P LED220/965 PSD WB CAU	22,000 lm	6500 K	169 lm/W	90	90 degree(s)	Beam angle 90°
911401502748	BY778P LED220/965 PSD NB CAU	22,000 lm	6500 K	169 lm/W	90	55 degree(s)	Beam angle 55°
911401502848	BY778P LED260/940 PSD WB CAU	26,000 lm	4000 K	168 lm/W	90	90 degree(s)	Beam angle 90°
911401502948	BY778P LED260/940 PSD NB CAU	26,000 lm	4000 K	168 lm/W	90	55 degree(s)	Beam angle 55°
911401503048	BY778P LED260/965 PSD WB CAU	26,000 lm	6500 K	168 lm/W	90	90 degree(s)	Beam angle 90°
911401503148	BY778P LED260/965 PSD NB CAU	26,000 lm	6500 K	168 lm/W	90	55 degree(s)	Beam angle 55°
911401503248	BY778P LED310/940 PSD WB CAU	31,000 lm	4000 K	168 lm/W	90	90 degree(s)	Beam angle 90°
911401503348	BY778P LED310/940 PSD NB CAU	31,000 lm	4000 K	168 lm/W	90	55 degree(s)	Beam angle 55°
911401503448	BY778P LED310/965 PSD WB CAU	31,000 lm	6500 K	168 lm/W	90	90 degree(s)	Beam angle 90°
911401503548	BY778P LED310/965 PSD NB CAU	31,000 lm	6500 K	168 lm/W	90	55 degree(s)	Beam angle 55°
911401503648	BY778P LED350/940 PSD WB CAU	35,000 lm	4000 K	167 lm/W	90	90 degree(s)	Beam angle 90°
911401503748	BY778P LED350/940 PSD NB CAU	35,000 lm	4000 K	167 lm/W	90	55 degree(s)	Beam angle 55°
911401503848	BY778P LED350/965 PSD WB CAU	35,000 lm	6500 K	167 lm/W	90	90 degree(s)	Beam angle 90°
911401503948	BY778P LED350/965 PSD NB CAU	35,000 lm	6500 K	167 lm/W	90	55 degree(s)	Beam angle 55°
911401504048	BY778X LED175/940 SIA WB CAU	17,500 lm	4000 K	167 lm/W	90	90 degree(s)	Beam angle 90°
911401504148	BY778X LED175/940 SIA NB CAU	17,500 lm	4000 K	167 lm/W	90	55 degree(s)	Beam angle 55°
911401504248	BY778X LED175/965 SIA WB CAU	17,500 lm	6500 K	167 lm/W	90	90 degree(s)	Beam angle 90°
911401504348	BY778X LED175/965 SIA NB CAU	17,500 lm	6500 K	167 lm/W	90	55 degree(s)	Beam angle 55°
911401504448	BY778X LED220/940 SIA WB CAU	22,000 lm	4000 K	169 lm/W	90	90 degree(s)	Beam angle 90°
911401504548	BY778X LED220/940 SIA NB CAU	22,000 lm	4000 K	169 lm/W	90	55 degree(s)	Beam angle 55°
911401504648	BY778X LED220/965 SIA WB CAU	22,000 lm	6500 K	169 lm/W	90	90 degree(s)	Beam angle 90°
911401504748	BY778X LED220/965 SIA NB CAU	22,000 lm	6500 K	169 lm/W	90	55 degree(s)	Beam angle 55°
911401504848	BY778X LED260/940 SIA WB CAU	26,000 lm	4000 K	168 lm/W	90	90 degree(s)	Beam angle 90°
911401504948	BY778X LED260/940 SIA NB CAU	26,000 lm	4000 K	168 lm/W	90	55 degree(s)	Beam angle 55°
911401505048	BY778X LED260/965 SIA WB CAU	26,000 lm	6500 K	168 lm/W	90	90 degree(s)	Beam angle 90°

Order Code	Full Product Name	Luminous Flux	Correlated Color Temperature (Nom)	Luminous Efficacy (rated) (Nom)	Color rendering index (CRI)	Beam angle of light source	Optic type
911401505148	BY778X LED260/965 SIA NB CAU	26,000 lm	6500 K	168 lm/W	90	55 degree(s)	Beam angle 55°
911401505248	BY778X LED310/940 SIA WB CAU	31,000 lm	4000 K	168 lm/W	90	90 degree(s)	Beam angle 90°
911401505348	BY778X LED310/940 SIA NB CAU	31,000 lm	4000 K	168 lm/W	90	55 degree(s)	Beam angle 55°
911401505448	BY778X LED310/965 SIA WB CAU	31,000 lm	6500 K	168 lm/W	90	90 degree(s)	Beam angle 90°
911401505548	BY778X LED310/965 SIA NB CAU	31,000 lm	6500 K	168 lm/W	90	55 degree(s)	Beam angle 55°
911401505648	BY778X LED350/940 SIA WB CAU	35,000 lm	4000 K	167 lm/W	90	90 degree(s)	Beam angle 90°
911401505748	BY778X LED350/940 SIA NB CAU	35,000 lm	4000 K	167 lm/W	90	55 degree(s)	Beam angle 55°
911401505848	BY778X LED350/965 SIA WB CAU	35,000 lm	6500 K	167 lm/W	90	90 degree(s)	Beam angle 90°
911401505948	BY778X LED350/965 SIA NB CAU	35,000 lm	6500 K	167 lm/W	90	55 degree(s)	Beam angle 55°
911401506048	BY778P LED200/850 PSD WB JP	17,500 lm	5000 K	167 lm/W	80	90 degree(s)	Beam angle 55°
911401506148	BY778P LED400/850 PSD WB JP	35,000 lm	5000 K	167 lm/W	80	90 degree(s)	Beam angle 55°
911401506248	BY778P LED105/TNW PSD WB	10,500 lm	Tunable White	175 lm/W	>80	90 degree(s)	Beam angle 90°
911401506348	BY778P LED150/TNW PSD WB	15,000 lm	Tunable White	166 lm/W	>80	90 degree(s)	Beam angle 90°
911401506448	BY778P LED200/TNW PSD WB	20,000 lm	Tunable White	166 lm/W	>80	90 degree(s)	Beam angle 90°
911401506548	BY778P LED255/TNW PSD WB	25,500 lm	Tunable White	170 lm/W	>80	90 degree(s)	Beam angle 90°
911401594447	BY778P LED100/NW PSD WB	10,000 lm	4000 K	190 lm/W	80	90 degree(s)	Beam angle 90°
911401594547	BY778P LED100/NW PSD NB	10,000 lm	4000 K	190 lm/W	80	55 degree(s)	Beam angle 55°
911401594647	BY778P LED100/CW PSD WB	10,000 lm	6500 K	190 lm/W	80	90 degree(s)	Beam angle 90°
911401594747	BY778P LED100/CW PSD NB	10,000 lm	6500 K	190 lm/W	80	55 degree(s)	Beam angle 55°
911401594847	BY778P LED150/NW PSD WB	15,000 lm	4000 K	190 lm/W	80	90 degree(s)	Beam angle 90°
911401594947	BY778P LED150/NW PSD NB	15,000 lm	4000 K	190 lm/W	80	55 degree(s)	Beam angle 55°
911401595047	BY778P LED150/CW PSD WB	15,000 lm	6500 K	190 lm/W	80	90 degree(s)	Beam angle 90°
911401595147	BY778P LED150/CW PSD NB	15,000 lm	6500 K	190 lm/W	80	55 degree(s)	Beam angle 55°
911401595247	BY778P LED200/NW PSD WB	20,000 lm	4000 K	190 lm/W	80	90 degree(s)	Beam angle 90°
911401595347	BY778P LED200/NW PSD NB	20,000 lm	4000 K	190 lm/W	80	55 degree(s)	Beam angle 55°
911401595447	BY778P LED200/CW PSD WB	20,000 lm	6500 K	190 lm/W	80	90 degree(s)	Beam angle 90°
911401595547	BY778P LED200/CW PSD NB	20,000 lm	6500 K	190 lm/W	80	55 degree(s)	Beam angle 55°
911401595647	BY778P LED250/NW PSD WB	25,000 lm	4000 K	190 lm/W	80	90 degree(s)	Beam angle 90°
911401595747	BY778P LED250/NW PSD NB	25,000 lm	4000 K	190 lm/W	80	55 degree(s)	Beam angle 55°
911401595847	BY778P LED250/CW PSD WB	25,000 lm	6500 K	190 lm/W	80	90 degree(s)	Beam angle 90°
911401595947	BY778P LED250/CW PSD NB	25,000 lm	6500 K	190 lm/W	80	55 degree(s)	Beam angle 55°
911401596047	BY778P LED300/NW PSD WB	30,000 lm	4000 K	190 lm/W	80	90 degree(s)	Beam angle 90°
911401596147	BY778P LED300/NW PSD NB	30,000 lm	4000 K	190 lm/W	80	55 degree(s)	Beam angle 55°
911401596247	BY778P LED300/CW PSD WB	30,000 lm	6500 K	190 lm/W	80	90 degree(s)	Beam angle 90°
911401596347	BY778P LED300/CW PSD NB	30,000 lm	6500 K	190 lm/W	80	55 degree(s)	Beam angle 55°
911401596447	BY778P LED350/NW PSD WB	35,000 lm	4000 K	190 lm/W	80	90 degree(s)	Beam angle 90°
911401596547	BY778P LED350/NW PSD NB	35,000 lm	4000 K	190 lm/W	80	55 degree(s)	Beam angle 55°
911401596647	BY778P LED350/CW PSD WB	35,000 lm	6500 K	190 lm/W	80	90 degree(s)	Beam angle 90°

Order Code	Full Product Name	Luminous Flux	Correlated Color Temperature (Nom)	Luminous Efficacy (rated) (Nom)	Color rendering index (CRI)	Beam angle of light source	Optic type
911401596747	BY778P LED350/CW PSD NB	35,000 lm	6500 K	190 lm/W	80	55 degree(s)	Beam angle 55°
911401596847	BY778P LED400/NW PSD WB	40,000 lm	4000 K	190 lm/W	80	90 degree(s)	Beam angle 90°
911401596947	BY778P LED400/NW PSD NB	40,000 lm	4000 K	190 lm/W	80	55 degree(s)	Beam angle 55°
911401597047	BY778P LED400/CW PSD WB	40,000 lm	6500 K	190 lm/W	80	90 degree(s)	Beam angle 90°
911401597147	BY778P LED400/CW PSD NB	40,000 lm	6500 K	190 lm/W	80	55 degree(s)	Beam angle 55°
911401597247	BY778X LED100/NW SIA WB	10,000 lm	4000 K	190 lm/W	80	90 degree(s)	Beam angle 90°
911401597347	BY778X LED100/NW SIA NB	10,000 lm	4000 K	190 lm/W	80	55 degree(s)	Beam angle 55°
911401597447	BY778X LED100/CW SIA WB	10,000 lm	6500 K	190 lm/W	80	90 degree(s)	Beam angle 90°
911401597547	BY778X LED100/CW SIA NB	10,000 lm	6500 K	190 lm/W	80	55 degree(s)	Beam angle 55°
911401597647	BY778X LED150/NW SIA WB	15,000 lm	4000 K	190 lm/W	80	90 degree(s)	Beam angle 90°
911401597747	BY778X LED150/NW SIA NB	15,000 lm	4000 K	190 lm/W	80	55 degree(s)	Beam angle 55°
911401597847	BY778X LED150/CW SIA WB	15,000 lm	6500 K	190 lm/W	80	90 degree(s)	Beam angle 90°
911401597947	BY778X LED150/CW SIA NB	15,000 lm	6500 K	190 lm/W	80	55 degree(s)	Beam angle 55°
911401598047	BY778X LED200/NW SIA WB	20,000 lm	4000 K	190 lm/W	80	90 degree(s)	Beam angle 90°
911401598147	BY778X LED200/NW SIA NB	20,000 lm	4000 K	190 lm/W	80	55 degree(s)	Beam angle 55°
911401598247	BY778X LED200/CW SIA WB	20,000 lm	6500 K	190 lm/W	80	90 degree(s)	Beam angle 90°
911401598347	BY778X LED200/CW SIA NB	20,000 lm	6500 K	190 lm/W	80	55 degree(s)	Beam angle 55°
911401598447	BY778X LED250/NW SIA WB	25,000 lm	4000 K	190 lm/W	80	90 degree(s)	Beam angle 90°
911401598547	BY778X LED250/NW SIA NB	25,000 lm	4000 K	190 lm/W	80	55 degree(s)	Beam angle 55°
911401598647	BY778X LED250/CW SIA WB	25,000 lm	6500 K	190 lm/W	80	90 degree(s)	Beam angle 90°
911401598747	BY778X LED250/CW SIA NB	25,000 lm	6500 K	190 lm/W	80	55 degree(s)	Beam angle 55°
911401598847	BY778X LED300/NW SIA WB	30,000 lm	4000 K	190 lm/W	80	90 degree(s)	Beam angle 90°
911401598947	BY778X LED300/NW SIA NB	30,000 lm	4000 K	190 lm/W	80	55 degree(s)	Beam angle 55°
911401599047	BY778X LED300/CW SIA WB	30,000 lm	6500 K	190 lm/W	80	90 degree(s)	Beam angle 90°
911401599147	BY778X LED300/CW SIA NB	30,000 lm	6500 K	190 lm/W	80	55 degree(s)	Beam angle 55°
911401599247	BY778X LED350/NW SIA WB	35,000 lm	4000 K	190 lm/W	80	90 degree(s)	Beam angle 90°
911401599347	BY778X LED350/NW SIA NB	35,000 lm	4000 K	190 lm/W	80	55 degree(s)	Beam angle 55°
911401599447	BY778X LED350/CW SIA WB	35,000 lm	6500 K	190 lm/W	80	90 degree(s)	Beam angle 90°
911401599547	BY778X LED350/CW SIA NB	35,000 lm	6500 K	190 lm/W	80	55 degree(s)	Beam angle 55°
911401599647	BY778X LED400/NW SIA WB	40,000 lm	4000 K	190 lm/W	80	90 degree(s)	Beam angle 90°
911401599747	BY778X LED400/NW SIA NB	40,000 lm	4000 K	190 lm/W	80	55 degree(s)	Beam angle 55°
911401599847	BY778X LED400/CW SIA WB	40,000 lm	6500 K	190 lm/W	80	90 degree(s)	Beam angle 90°
911401599947	BY778X LED400/CW SIA NB	40,000 lm	6500 K	190 lm/W	80	55 degree(s)	Beam angle 55°
911401620609	BY778P LED100/NW PSU WB	10,000 lm	4000 K	196 lm/W	80	90 degree(s)	Beam angle 90°
911401620709	BY778P LED100/NW PSU NB	10,000 lm	4000 K	196 lm/W	80	55 degree(s)	Beam angle 55°
911401620809	BY778P LED100/CW PSU WB	10,000 lm	6500 K	196 lm/W	80	90 degree(s)	Beam angle 90°
911401620909	BY778P LED100/CW PSU NB	10,000 lm	6500 K	196 lm/W	80	55 degree(s)	Beam angle 55°
911401621009	BY778P LED150/NW PSU WB	15,000 lm	4000 K	192 lm/W	80	90 degree(s)	Beam angle 90°
911401621109	BY778P LED150/NW PSU NB	15,000 lm	4000 K	192 lm/W	80	55 degree(s)	Beam angle 55°
911401621209	BY778P LED150/CW PSU WB	15,000 lm	6500 K	192 lm/W	80	90 degree(s)	Beam angle 90°

Order Code	Full Product Name	Luminous Flux	Correlated Color Temperature (Nom)	Luminous Efficacy (rated) (Nom)	Color rendering index (CRI)	Beam angle of light source	Optic type
911401621309	BY778P LED150/CW PSU NB	15,000 lm	6500 K	192 lm/W	80	55 degree(s)	Beam angle 55°
911401621409	BY778P LED200/NW PSU WB	20,000 lm	4000 K	190 lm/W	80	90 degree(s)	Beam angle 90°
911401621509	BY778P LED200/NW PSU NB	20,000 lm	4000 K	190 lm/W	80	55 degree(s)	Beam angle 55°
911401621609	BY778P LED200/CW PSU WB	20,000 lm	6500 K	190 lm/W	80	90 degree(s)	Beam angle 90°
911401621709	BY778P LED200/CW PSU NB	20,000 lm	6500 K	190 lm/W	80	55 degree(s)	Beam angle 55°
911401621809	BY778P LED250/NW PSU WB	25,000 lm	4000 K	192 lm/W	80	90 degree(s)	Beam angle 90°
911401621909	BY778P LED250/NW PSU NB	25,000 lm	4000 K	192 lm/W	80	55 degree(s)	Beam angle 55°
911401622009	BY778P LED250/CW PSU WB	25,000 lm	6500 K	192 lm/W	80	90 degree(s)	Beam angle 90°
911401622109	BY778P LED250/CW PSU NB	25,000 lm	6500 K	192 lm/W	80	55 degree(s)	Beam angle 55°
911401622209	BY778P LED300/NW PSU WB	30,000 lm	4000 K	194 lm/W	80	90 degree(s)	Beam angle 90°
911401622309	BY778P LED300/NW PSU NB	30,000 lm	4000 K	194 lm/W	80	55 degree(s)	Beam angle 55°
911401622409	BY778P LED300/CW PSU WB	30,000 lm	6500 K	194 lm/W	80	90 degree(s)	Beam angle 90°
911401622509	BY778P LED300/CW PSU NB	30,000 lm	6500 K	194 lm/W	80	55 degree(s)	Beam angle 55°
911401622609	BY778P LED350/NW PSU WB	35,000 lm	4000 K	190 lm/W	80	90 degree(s)	Beam angle 90°
911401622709	BY778P LED350/NW PSU NB	35,000 lm	4000 K	190 lm/W	80	55 degree(s)	Beam angle 55°
911401622809	BY778P LED350/CW PSU WB	35,000 lm	6500 K	190 lm/W	80	90 degree(s)	Beam angle 90°
911401622909	BY778P LED350/CW PSU NB	35,000 lm	6500 K	190 lm/W	80	55 degree(s)	Beam angle 55°
911401623009	BY778P LED400/NW PSU WB	40,000 lm	4000 K	190 lm/W	80	90 degree(s)	Beam angle 90°
911401623109	BY778P LED400/NW PSU NB	40,000 lm	4000 K	190 lm/W	80	55 degree(s)	Beam angle 55°
911401623209	BY778P LED400/CW PSU WB	40,000 lm	6500 K	190 lm/W	80	90 degree(s)	Beam angle 90°
911401623309	BY778P LED400/CW PSU NB	40,000 lm	6500 K	190 lm/W	80	55 degree(s)	Beam angle 55°

Operating and Electrical

Order Code	Full Product Name	Input Voltage	Power Consumption	Suitable for random switching
911401500048	BY778P LED175/940 PSU WB CAU	200 to 240 V	105 W	No
911401500148	BY778P LED175/940 PSU NB CAU	200 to 240 V	105 W	No
911401500248	BY778P LED175/965 PSU WB CAU	200 to 240 V	105 W	No
911401500348	BY778P LED175/965 PSU NB CAU	200 to 240 V	105 W	No
911401500448	BY778P LED220/940 PSU WB CAU	200 to 240 V	130 W	No
911401500548	BY778P LED220/940 PSU NB CAU	200 to 240 V	130 W	No
911401500648	BY778P LED220/965 PSU WB CAU	200 to 240 V	130 W	No
911401500748	BY778P LED220/965 PSU NB CAU	200 to 240 V	130 W	No
911401500848	BY778P LED260/940 PSU WB CAU	200 to 240 V	155 W	No
911401500948	BY778P LED260/940 PSU NB CAU	200 to 240 V	155 W	No
911401501048	BY778P LED260/965 PSU WB CAU	200 to 240 V	155 W	No
911401501148	BY778P LED260/965 PSU NB CAU	200 to 240 V	155 W	No
911401501248	BY778P LED310/940 PSU WB CAU	200 to 240 V	184 W	No
911401501348	BY778P LED310/940 PSU NB CAU	200 to 240 V	184 W	No
911401501448	BY778P LED310/965 PSU WB CAU	200 to 240 V	184 W	No

Order Code	Full Product Name	Input Voltage	Power Consumption	Suitable for random switching
911401501548	BY778P LED310/965 PSU NB CAU	200 to 240 V	184 W	No
911401501648	BY778P LED350/940 PSU WB CAU	200 to 240 V	210 W	No
911401501748	BY778P LED350/940 PSU NB CAU	200 to 240 V	210 W	No
911401501848	BY778P LED350/965 PSU WB CAU	200 to 240 V	210 W	No
911401501948	BY778P LED350/965 PSU NB CAU	200 to 240 V	210 W	No
911401502048	BY778P LED175/940 PSD WB CAU	200 to 240 V	105 W	No
911401502148	BY778P LED175/940 PSD NB CAU	200 to 240 V	105 W	No
911401502248	BY778P LED175/965 PSD WB CAU	200 to 240 V	105 W	No
911401502348	BY778P LED175/965 PSD NB CAU	200 to 240 V	105 W	No
911401502448	BY778P LED220/940 PSD WB CAU	200 to 240 V	130 W	No
911401502548	BY778P LED220/940 PSD NB CAU	200 to 240 V	130 W	No
911401502648	BY778P LED220/965 PSD WB CAU	200 to 240 V	130 W	No
911401502748	BY778P LED220/965 PSD NB CAU	200 to 240 V	130 W	No
911401502848	BY778P LED260/940 PSD WB CAU	200 to 240 V	155 W	No
911401502948	BY778P LED260/940 PSD NB CAU	200 to 240 V	155 W	No
911401503048	BY778P LED260/965 PSD WB CAU	200 to 240 V	155 W	No
911401503148	BY778P LED260/965 PSD NB CAU	200 to 240 V	155 W	No
911401503248	BY778P LED310/940 PSD WB CAU	200 to 240 V	184 W	No
911401503348	BY778P LED310/940 PSD NB CAU	200 to 240 V	184 W	No
911401503448	BY778P LED310/965 PSD WB CAU	200 to 240 V	184 W	No
911401503548	BY778P LED310/965 PSD NB CAU	200 to 240 V	184 W	No
911401503648	BY778P LED350/940 PSD WB CAU	200 to 240 V	210 W	No
911401503748	BY778P LED350/940 PSD NB CAU	200 to 240 V	210 W	No
911401503848	BY778P LED350/965 PSD WB CAU	200 to 240 V	210 W	No
911401503948	BY778P LED350/965 PSD NB CAU	200 to 240 V	210 W	No
911401504048	BY778X LED175/940 SIA WB CAU	200 to 240 V	105 W	No
911401504148	BY778X LED175/940 SIA NB CAU	200 to 240 V	105 W	No
911401504248	BY778X LED175/965 SIA WB CAU	200 to 240 V	105 W	No
911401504348	BY778X LED175/965 SIA NB CAU	200 to 240 V	105 W	No
911401504448	BY778X LED220/940 SIA WB CAU	200 to 240 V	130 W	No
911401504548	BY778X LED220/940 SIA NB CAU	200 to 240 V	130 W	No
911401504648	BY778X LED220/965 SIA WB CAU	200 to 240 V	130 W	No
911401504748	BY778X LED220/965 SIA NB CAU	200 to 240 V	130 W	No
911401504848	BY778X LED260/940 SIA WB CAU	200 to 240 V	155 W	No
911401504948	BY778X LED260/940 SIA NB CAU	200 to 240 V	155 W	No
911401505048	BY778X LED260/965 SIA WB CAU	200 to 240 V	155 W	No
911401505148	BY778X LED260/965 SIA NB CAU	200 to 240 V	155 W	No
911401505248	BY778X LED310/940 SIA WB CAU	200 to 240 V	184 W	No
911401505348	BY778X LED310/940 SIA NB CAU	200 to 240 V	184 W	No
911401505448	BY778X LED310/965 SIA WB CAU	200 to 240 V	184 W	No
911401505548	BY778X LED310/965 SIA NB CAU	200 to 240 V	184 W	No
911401505648	BY778X LED350/940 SIA WB CAU	200 to 240 V	210 W	No

Order Code	Full Product Name	Input Voltage	Power Consumption	Suitable for random switching
911401505748	BY778X LED350/940 SIA NB CAU	200 to 240 V	210 W	No
911401505848	BY778X LED350/965 SIA WB CAU	200 to 240 V	210 W	No
911401505948	BY778X LED350/965 SIA NB CAU	200 to 240 V	210 W	No
911401506048	BY778P LED200/850 PSD WB JP	200 to 240 V	105 W	No
911401506148	BY778P LED400/850 PSD WB JP	200 to 240 V	210 W	No
911401506248	BY778P LED105/TNW PSD WB	220 to 240 V	60 W	No
911401506348	BY778P LED150/TNW PSD WB	220 to 240 V	90 W	No
911401506448	BY778P LED200/TNW PSD WB	220 to 240 V	120 W	No
911401506548	BY778P LED255/TNW PSD WB	220 to 240 V	150 W	No
911401594447	BY778P LED100/NW PSD WB	200 to 240 V	51 W	No
911401594547	BY778P LED100/NW PSD NB	200 to 240 V	51 W	No
911401594647	BY778P LED100/CW PSD WB	200 to 240 V	51 W	No
911401594747	BY778P LED100/CW PSD NB	200 to 240 V	51 W	No
911401594847	BY778P LED150/NW PSD WB	200 to 240 V	78 W	No
911401594947	BY778P LED150/NW PSD NB	200 to 240 V	78 W	No
911401595047	BY778P LED150/CW PSD WB	200 to 240 V	78 W	No
911401595147	BY778P LED150/CW PSD NB	200 to 240 V	78 W	No
911401595247	BY778P LED200/NW PSD WB	200 to 240 V	105 W	No
911401595347	BY778P LED200/NW PSD NB	200 to 240 V	105 W	No
911401595447	BY778P LED200/CW PSD WB	200 to 240 V	105 W	No
911401595547	BY778P LED200/CW PSD NB	200 to 240 V	105 W	No
911401595647	BY778P LED250/NW PSD WB	200 to 240 V	130 W	No
911401595747	BY778P LED250/NW PSD NB	200 to 240 V	130 W	No
911401595847	BY778P LED250/CW PSD WB	200 to 240 V	130 W	No
911401595947	BY778P LED250/CW PSD NB	200 to 240 V	130 W	No
911401596047	BY778P LED300/NW PSD WB	200 to 240 V	155 W	No
911401596147	BY778P LED300/NW PSD NB	200 to 240 V	155 W	No
911401596247	BY778P LED300/CW PSD WB	200 to 240 V	155 W	No
911401596347	BY778P LED300/CW PSD NB	200 to 240 V	155 W	No
911401596447	BY778P LED350/NW PSD WB	200 to 240 V	184 W	No
911401596547	BY778P LED350/NW PSD NB	200 to 240 V	184 W	No
911401596647	BY778P LED350/CW PSD WB	200 to 240 V	184 W	No
911401596747	BY778P LED350/CW PSD NB	200 to 240 V	184 W	No
911401596847	BY778P LED400/NW PSD WB	200 to 240 V	210 W	No
911401596947	BY778P LED400/NW PSD NB	200 to 240 V	210 W	No
911401597047	BY778P LED400/CW PSD WB	200 to 240 V	210 W	No
911401597147	BY778P LED400/CW PSD NB	200 to 240 V	210 W	No
911401597247	BY778X LED100/NW SIA WB	200 to 240 V	51 W	No
911401597347	BY778X LED100/NW SIA NB	200 to 240 V	51 W	No
911401597447	BY778X LED100/CW SIA WB	200 to 240 V	51 W	No
911401597547	BY778X LED100/CW SIA NB	200 to 240 V	51 W	No
911401597647	BY778X LED150/NW SIA WB	200 to 240 V	78 W	No

Order Code	Full Product Name	Input Voltage	Power Consumption	Suitable for random switching
911401597747	BY778X LED150/NW SIA NB	200 to 240 V	78 W	No
911401597847	BY778X LED150/CW SIA WB	200 to 240 V	78 W	No
911401597947	BY778X LED150/CW SIA NB	200 to 240 V	78 W	No
911401598047	BY778X LED200/NW SIA WB	200 to 240 V	105 W	No
911401598147	BY778X LED200/NW SIA NB	200 to 240 V	105 W	No
911401598247	BY778X LED200/CW SIA WB	200 to 240 V	105 W	No
911401598347	BY778X LED200/CW SIA NB	200 to 240 V	105 W	No
911401598447	BY778X LED250/NW SIA WB	200 to 240 V	130 W	No
911401598547	BY778X LED250/NW SIA NB	200 to 240 V	130 W	No
911401598647	BY778X LED250/CW SIA WB	200 to 240 V	130 W	No
911401598747	BY778X LED250/CW SIA NB	200 to 240 V	130 W	No
911401598847	BY778X LED300/NW SIA WB	200 to 240 V	155 W	No
911401598947	BY778X LED300/NW SIA NB	200 to 240 V	155 W	No
911401599047	BY778X LED300/CW SIA WB	200 to 240 V	155 W	No
911401599147	BY778X LED300/CW SIA NB	200 to 240 V	155 W	No
911401599247	BY778X LED350/NW SIA WB	200 to 240 V	184 W	No
911401599347	BY778X LED350/NW SIA NB	200 to 240 V	184 W	No
911401599447	BY778X LED350/CW SIA WB	200 to 240 V	184 W	No
911401599547	BY778X LED350/CW SIA NB	200 to 240 V	184 W	No
911401599647	BY778X LED400/NW SIA WB	200 to 240 V	210 W	No
911401599747	BY778X LED400/NW SIA NB	200 to 240 V	210 W	No
911401599847	BY778X LED400/CW SIA WB	200 to 240 V	210 W	No
911401599947	BY778X LED400/CW SIA NB	200 to 240 V	210 W	No
911401620609	BY778P LED100/NW PSU WB	200 to 240 V	51 W	Yes
911401620709	BY778P LED100/NW PSU NB	200 to 240 V	51 W	Yes
911401620809	BY778P LED100/CW PSU WB	200 to 240 V	51 W	Yes
911401620909	BY778P LED100/CW PSU NB	200 to 240 V	51 W	Yes
911401621009	BY778P LED150/NW PSU WB	200 to 240 V	78 W	Yes
911401621109	BY778P LED150/NW PSU NB	200 to 240 V	78 W	Yes
911401621209	BY778P LED150/CW PSU WB	200 to 240 V	78 W	Yes
911401621309	BY778P LED150/CW PSU NB	200 to 240 V	78 W	Yes
911401621409	BY778P LED200/NW PSU WB	200 to 240 V	105 W	Yes
911401621509	BY778P LED200/NW PSU NB	200 to 240 V	105 W	Yes
911401621609	BY778P LED200/CW PSU WB	200 to 240 V	105 W	Yes
911401621709	BY778P LED200/CW PSU NB	200 to 240 V	105 W	Yes
911401621809	BY778P LED250/NW PSU WB	200 to 240 V	130 W	Yes
911401621909	BY778P LED250/NW PSU NB	200 to 240 V	130 W	Yes
911401622009	BY778P LED250/CW PSU WB	200 to 240 V	130 W	Yes
911401622109	BY778P LED250/CW PSU NB	200 to 240 V	130 W	Yes
911401622209	BY778P LED300/NW PSU WB	200 to 240 V	155 W	Yes
911401622309	BY778P LED300/NW PSU NB	200 to 240 V	155 W	Yes
911401622409	BY778P LED300/CW PSU WB	200 to 240 V	155 W	Yes

Order Code	Full Product Name	Input Voltage	Power Consumption	Suitable for random switching
911401622509	BY778P LED300/CW PSU NB	200 to 240 V	155 W	Yes
911401622609	BY778P LED350/NW PSU WB	200 to 240 V	184 W	Yes
911401622709	BY778P LED350/NW PSU NB	200 to 240 V	184 W	Yes
911401622809	BY778P LED350/CW PSU WB	200 to 240 V	184 W	Yes
911401622909	BY778P LED350/CW PSU NB	200 to 240 V	184 W	Yes
911401623009	BY778P LED400/NW PSU WB	200 to 240 V	210 W	Yes
911401623109	BY778P LED400/NW PSU NB	200 to 240 V	210 W	Yes
911401623209	BY778P LED400/CW PSU WB	200 to 240 V	210 W	Yes
911401623309	BY778P LED400/CW PSU NB	200 to 240 V	210 W	Yes

Controls and Dimming

Order Code	Full Product Name	Dimmable
911401500048	BY778P LED175/940 PSU WB CAU	-
911401500148	BY778P LED175/940 PSU NB CAU	-
911401500248	BY778P LED175/965 PSU WB CAU	-
911401500348	BY778P LED175/965 PSU NB CAU	-
911401500448	BY778P LED220/940 PSU WB CAU	-
911401500548	BY778P LED220/940 PSU NB CAU	-
911401500648	BY778P LED220/965 PSU WB CAU	-
911401500748	BY778P LED220/965 PSU NB CAU	-
911401500848	BY778P LED260/940 PSU WB CAU	-
911401500948	BY778P LED260/940 PSU NB CAU	-
911401501048	BY778P LED260/965 PSU WB CAU	-
911401501148	BY778P LED260/965 PSU NB CAU	-
911401501248	BY778P LED310/940 PSU WB CAU	-
911401501348	BY778P LED310/940 PSU NB CAU	-
911401501448	BY778P LED310/965 PSU WB CAU	-
911401501548	BY778P LED310/965 PSU NB CAU	-
911401501648	BY778P LED350/940 PSU WB CAU	-
911401501748	BY778P LED350/940 PSU NB CAU	-
911401501848	BY778P LED350/965 PSU WB CAU	-
911401501948	BY778P LED350/965 PSU NB CAU	-
911401502048	BY778P LED175/940 PSD WB CAU	DALI
911401502148	BY778P LED175/940 PSD NB CAU	DALI
911401502248	BY778P LED175/965 PSD WB CAU	DALI
911401502348	BY778P LED175/965 PSD NB CAU	DALI
911401502448	BY778P LED220/940 PSD WB CAU	DALI
911401502548	BY778P LED220/940 PSD NB CAU	DALI
911401502648	BY778P LED220/965 PSD WB CAU	DALI
911401502748	BY778P LED220/965 PSD NB CAU	DALI
911401502848	BY778P LED260/940 PSD WB CAU	DALI

Order Code	Full Product Name	Dimmable
911401502948	BY778P LED260/940 PSD NB CAU	DALI
911401503048	BY778P LED260/965 PSD WB CAU	DALI
911401503148	BY778P LED260/965 PSD NB CAU	DALI
911401503248	BY778P LED310/940 PSD WB CAU	DALI
911401503348	BY778P LED310/940 PSD NB CAU	DALI
911401503448	BY778P LED310/965 PSD WB CAU	DALI
911401503548	BY778P LED310/965 PSD NB CAU	DALI
911401503648	BY778P LED350/940 PSD WB CAU	DALI
911401503748	BY778P LED350/940 PSD NB CAU	DALI
911401503848	BY778P LED350/965 PSD WB CAU	DALI
911401503948	BY778P LED350/965 PSD NB CAU	DALI
911401504048	BY778X LED175/940 SIA WB CAU	Wireless Dim
911401504148	BY778X LED175/940 SIA NB CAU	Wireless Dim
911401504248	BY778X LED175/965 SIA WB CAU	Wireless Dim
911401504348	BY778X LED175/965 SIA NB CAU	Wireless Dim
911401504448	BY778X LED220/940 SIA WB CAU	Wireless Dim
911401504548	BY778X LED220/940 SIA NB CAU	Wireless Dim
911401504648	BY778X LED220/965 SIA WB CAU	Wireless Dim
911401504748	BY778X LED220/965 SIA NB CAU	Wireless Dim
911401504848	BY778X LED260/940 SIA WB CAU	Wireless Dim
911401504948	BY778X LED260/940 SIA NB CAU	Wireless Dim
911401505048	BY778X LED260/965 SIA WB CAU	Wireless Dim
911401505148	BY778X LED260/965 SIA NB CAU	Wireless Dim
911401505248	BY778X LED310/940 SIA WB CAU	Wireless Dim
911401505348	BY778X LED310/940 SIA NB CAU	Wireless Dim
911401505448	BY778X LED310/965 SIA WB CAU	Wireless Dim
911401505548	BY778X LED310/965 SIA NB CAU	Wireless Dim
911401505648	BY778X LED350/940 SIA WB CAU	Wireless Dim
911401505748	BY778X LED350/940 SIA NB CAU	Wireless Dim
911401505848	BY778X LED350/965 SIA WB CAU	Wireless Dim
911401505948	BY778X LED350/965 SIA NB CAU	Wireless Dim
911401506048	BY778P LED200/850 PSD WB JP	DALI
911401506148	BY778P LED400/850 PSD WB JP	DALI
911401506248	BY778P LED105/TNW PSD WB	DALI
911401506348	BY778P LED150/TNW PSD WB	DALI
911401506448	BY778P LED200/TNW PSD WB	DALI
911401506548	BY778P LED255/TNW PSD WB	DALI
911401594447	BY778P LED100/NW PSD WB	DALI
911401594547	BY778P LED100/NW PSD NB	DALI
911401594647	BY778P LED100/CW PSD WB	DALI
911401594747	BY778P LED100/CW PSD NB	DALI
911401594847	BY778P LED150/NW PSD WB	DALI

Order Code	Full Product Name	Dimmable
911401594947	BY778P LED150/NW PSD NB	DALI
911401595047	BY778P LED150/CW PSD WB	DALI
911401595147	BY778P LED150/CW PSD NB	DALI
911401595247	BY778P LED200/NW PSD WB	DALI
911401595347	BY778P LED200/NW PSD NB	DALI
911401595447	BY778P LED200/CW PSD WB	DALI
911401595547	BY778P LED200/CW PSD NB	DALI
911401595647	BY778P LED250/NW PSD WB	DALI
911401595747	BY778P LED250/NW PSD NB	DALI
911401595847	BY778P LED250/CW PSD WB	DALI
911401595947	BY778P LED250/CW PSD NB	DALI
911401596047	BY778P LED300/NW PSD WB	DALI
911401596147	BY778P LED300/NW PSD NB	DALI
911401596247	BY778P LED300/CW PSD WB	DALI
911401596347	BY778P LED300/CW PSD NB	DALI
911401596447	BY778P LED350/NW PSD WB	DALI
911401596547	BY778P LED350/NW PSD NB	DALI
911401596647	BY778P LED350/CW PSD WB	DALI
911401596747	BY778P LED350/CW PSD NB	DALI
911401596847	BY778P LED400/NW PSD WB	DALI
911401596947	BY778P LED400/NW PSD NB	DALI
911401597047	BY778P LED400/CW PSD WB	DALI
911401597147	BY778P LED400/CW PSD NB	DALI
911401597247	BY778X LED100/NW SIA WB	Wireless Dim
911401597347	BY778X LED100/NW SIA NB	Wireless Dim
911401597447	BY778X LED100/CW SIA WB	Wireless Dim
911401597547	BY778X LED100/CW SIA NB	Wireless Dim
911401597647	BY778X LED150/NW SIA WB	Wireless Dim
911401597747	BY778X LED150/NW SIA NB	Wireless Dim
911401597847	BY778X LED150/CW SIA WB	Wireless Dim
911401597947	BY778X LED150/CW SIA NB	Wireless Dim
911401598047	BY778X LED200/NW SIA WB	Wireless Dim
911401598147	BY778X LED200/NW SIA NB	Wireless Dim
911401598247	BY778X LED200/CW SIA WB	Wireless Dim
911401598347	BY778X LED200/CW SIA NB	Wireless Dim
911401598447	BY778X LED250/NW SIA WB	Wireless Dim
911401598547	BY778X LED250/NW SIA NB	Wireless Dim
911401598647	BY778X LED250/CW SIA WB	Wireless Dim
911401598747	BY778X LED250/CW SIA NB	Wireless Dim
911401598847	BY778X LED300/NW SIA WB	Wireless Dim
911401598947	BY778X LED300/NW SIA NB	Wireless Dim
911401599047	BY778X LED300/CW SIA WB	Wireless Dim

Order Code	Full Product Name	Dimmable
911401599147	BY778X LED300/CW SIA NB	Wireless Dim
911401599247	BY778X LED350/NW SIA WB	Wireless Dim
911401599347	BY778X LED350/NW SIA NB	Wireless Dim
911401599447	BY778X LED350/CW SIA WB	Wireless Dim
911401599547	BY778X LED350/CW SIA NB	Wireless Dim
911401599647	BY778X LED400/NW SIA WB	Wireless Dim
911401599747	BY778X LED400/NW SIA NB	Wireless Dim
911401599847	BY778X LED400/CW SIA WB	Wireless Dim
911401599947	BY778X LED400/CW SIA NB	Wireless Dim
911401620609	BY778P LED100/NW PSU WB	-
911401620709	BY778P LED100/NW PSU NB	-
911401620809	BY778P LED100/CW PSU WB	-
911401620909	BY778P LED100/CW PSU NB	-
911401621009	BY778P LED150/NW PSU WB	-
911401621109	BY778P LED150/NW PSU NB	-
911401621209	BY778P LED150/CW PSU WB	-
911401621309	BY778P LED150/CW PSU NB	-
911401621409	BY778P LED200/NW PSU WB	-
911401621509	BY778P LED200/NW PSU NB	-
911401621609	BY778P LED200/CW PSU WB	-
911401621709	BY778P LED200/CW PSU NB	-
911401621809	BY778P LED250/NW PSU WB	-
911401621909	BY778P LED250/NW PSU NB	-
911401622009	BY778P LED250/CW PSU WB	-
911401622109	BY778P LED250/CW PSU NB	-
911401622209	BY778P LED300/NW PSU WB	-
911401622309	BY778P LED300/NW PSU NB	-
911401622409	BY778P LED300/CW PSU WB	-
911401622509	BY778P LED300/CW PSU NB	-
911401622609	BY778P LED350/NW PSU WB	-
911401622709	BY778P LED350/NW PSU NB	-
911401622809	BY778P LED350/CW PSU WB	-
911401622909	BY778P LED350/CW PSU NB	-
911401623009	BY778P LED400/NW PSU WB	-
911401623109	BY778P LED400/NW PSU NB	-
911401623209	BY778P LED400/CW PSU WB	-
911401623309	BY778P LED400/CW PSU NB	-

Mechanical and Housing

Order Code	Full Product Name	Ingress protection code	Mech. impact protection code
911401500048	BY778P LED175/940 PSU WB CAU	IP66	IK08

Order Code	Full Product Name	Ingress protection code	Mech. impact protection code
911401500148	BY778P LED175/940 PSU NB CAU	IP66	IK08
911401500248	BY778P LED175/965 PSU WB CAU	IP66	IK08
911401500348	BY778P LED175/965 PSU NB CAU	IP66	IK08
911401500448	BY778P LED220/940 PSU WB CAU	IP66	IK08
911401500548	BY778P LED220/940 PSU NB CAU	IP66	IK08
911401500648	BY778P LED220/965 PSU WB CAU	IP66	IK08
911401500748	BY778P LED220/965 PSU NB CAU	IP66	IK08
911401500848	BY778P LED260/940 PSU WB CAU	IP66	IK08
911401500948	BY778P LED260/940 PSU NB CAU	IP66	IK08
911401501048	BY778P LED260/965 PSU WB CAU	IP66	IK08
911401501148	BY778P LED260/965 PSU NB CAU	IP66	IK08
911401501248	BY778P LED310/940 PSU WB CAU	IP66	IK08
911401501348	BY778P LED310/940 PSU NB CAU	IP66	IK08
911401501448	BY778P LED310/965 PSU WB CAU	IP66	IK08
911401501548	BY778P LED310/965 PSU NB CAU	IP66	IK08
911401501648	BY778P LED350/940 PSU WB CAU	IP66	IK08
911401501748	BY778P LED350/940 PSU NB CAU	IP66	IK08
911401501848	BY778P LED350/965 PSU WB CAU	IP66	IK08
911401501948	BY778P LED350/965 PSU NB CAU	IP66	IK08
911401502048	BY778P LED175/940 PSD WB CAU	IP66	IK08
911401502148	BY778P LED175/940 PSD NB CAU	IP66	IK08
911401502248	BY778P LED175/965 PSD WB CAU	IP66	IK08
911401502348	BY778P LED175/965 PSD NB CAU	IP66	IK08
911401502448	BY778P LED220/940 PSD WB CAU	IP66	IK08
911401502548	BY778P LED220/940 PSD NB CAU	IP66	IK08
911401502648	BY778P LED220/965 PSD WB CAU	IP66	IK08
911401502748	BY778P LED220/965 PSD NB CAU	IP66	IK08
911401502848	BY778P LED260/940 PSD WB CAU	IP66	IK08
911401502948	BY778P LED260/940 PSD NB CAU	IP66	IK08
911401503048	BY778P LED260/965 PSD WB CAU	IP66	IK08
911401503148	BY778P LED260/965 PSD NB CAU	IP66	IK08
911401503248	BY778P LED310/940 PSD WB CAU	IP66	IK08
911401503348	BY778P LED310/940 PSD NB CAU	IP66	IK08
911401503448	BY778P LED310/965 PSD WB CAU	IP66	IK08
911401503548	BY778P LED310/965 PSD NB CAU	IP66	IK08
911401503648	BY778P LED350/940 PSD WB CAU	IP66	IK08
911401503748	BY778P LED350/940 PSD NB CAU	IP66	IK08
911401503848	BY778P LED350/965 PSD WB CAU	IP66	IK08
911401503948	BY778P LED350/965 PSD NB CAU	IP66	IK08
911401504048	BY778X LED175/940 SIA WB CAU	IP65	IK05
911401504148	BY778X LED175/940 SIA NB CAU	IP65	IK05
911401504248	BY778X LED175/965 SIA WB CAU	IP65	IK05

Order Code	Full Product Name	Ingress protection code	Mech. impact protection code
911401504348	BY778X LED175/965 SIA NB CAU	IP65	IK05
911401504448	BY778X LED220/940 SIA WB CAU	IP65	IK05
911401504548	BY778X LED220/940 SIA NB CAU	IP65	IK05
911401504648	BY778X LED220/965 SIA WB CAU	IP65	IK05
911401504748	BY778X LED220/965 SIA NB CAU	IP65	IK05
911401504848	BY778X LED260/940 SIA WB CAU	IP65	IK05
911401504948	BY778X LED260/940 SIA NB CAU	IP65	IK05
911401505048	BY778X LED260/965 SIA WB CAU	IP65	IK05
911401505148	BY778X LED260/965 SIA NB CAU	IP65	IK05
911401505248	BY778X LED310/940 SIA WB CAU	IP65	IK05
911401505348	BY778X LED310/940 SIA NB CAU	IP65	IK05
911401505448	BY778X LED310/965 SIA WB CAU	IP65	IK05
911401505548	BY778X LED310/965 SIA NB CAU	IP65	IK05
911401505648	BY778X LED350/940 SIA WB CAU	IP65	IK05
911401505748	BY778X LED350/940 SIA NB CAU	IP65	IK05
911401505848	BY778X LED350/965 SIA WB CAU	IP65	IK05
911401505948	BY778X LED350/965 SIA NB CAU	IP65	IK05
911401506048	BY778P LED200/850 PSD WB JP	IP66	IK08
911401506148	BY778P LED400/850 PSD WB JP	IP66	IK08
911401506248	BY778P LED105/TNW PSD WB	IP66	IK08
911401506348	BY778P LED150/TNW PSD WB	IP66	IK08
911401506448	BY778P LED200/TNW PSD WB	IP66	IK08
911401506548	BY778P LED255/TNW PSD WB	IP66	IK08
911401594447	BY778P LED100/NW PSD WB	IP66	IK08
911401594547	BY778P LED100/NW PSD NB	IP66	IK08
911401594647	BY778P LED100/CW PSD WB	IP66	IK08
911401594747	BY778P LED100/CW PSD NB	IP66	IK08
911401594847	BY778P LED150/NW PSD WB	IP66	IK08
911401594947	BY778P LED150/NW PSD NB	IP66	IK08
911401595047	BY778P LED150/CW PSD WB	IP66	IK08
911401595147	BY778P LED150/CW PSD NB	IP66	IK08
911401595247	BY778P LED200/NW PSD WB	IP66	IK08
911401595347	BY778P LED200/NW PSD NB	IP66	IK08
911401595447	BY778P LED200/CW PSD WB	IP66	IK08
911401595547	BY778P LED200/CW PSD NB	IP66	IK08
911401595647	BY778P LED250/NW PSD WB	IP66	IK08
911401595747	BY778P LED250/NW PSD NB	IP66	IK08
911401595847	BY778P LED250/CW PSD WB	IP66	IK08
911401595947	BY778P LED250/CW PSD NB	IP66	IK08
911401596047	BY778P LED300/NW PSD WB	IP66	IK08
911401596147	BY778P LED300/NW PSD NB	IP66	IK08
911401596247	BY778P LED300/CW PSD WB	IP66	IK08

Order Code	Full Product Name	Ingress protection code	Mech. impact protection code
911401596347	BY778P LED300/CW PSD NB	IP66	IK08
911401596447	BY778P LED350/NW PSD WB	IP66	IK08
911401596547	BY778P LED350/NW PSD NB	IP66	IK08
911401596647	BY778P LED350/CW PSD WB	IP66	IK08
911401596747	BY778P LED350/CW PSD NB	IP66	IK08
911401596847	BY778P LED400/NW PSD WB	IP66	IK08
911401596947	BY778P LED400/NW PSD NB	IP66	IK08
911401597047	BY778P LED400/CW PSD WB	IP66	IK08
911401597147	BY778P LED400/CW PSD NB	IP66	IK08
911401597247	BY778X LED100/NW SIA WB	IP65	IK05
911401597347	BY778X LED100/NW SIA NB	IP65	IK05
911401597447	BY778X LED100/CW SIA WB	IP65	IK05
911401597547	BY778X LED100/CW SIA NB	IP65	IK05
911401597647	BY778X LED150/NW SIA WB	IP65	IK05
911401597747	BY778X LED150/NW SIA NB	IP65	IK05
911401597847	BY778X LED150/CW SIA WB	IP65	IK05
911401597947	BY778X LED150/CW SIA NB	IP65	IK05
911401598047	BY778X LED200/NW SIA WB	IP65	IK05
911401598147	BY778X LED200/NW SIA NB	IP65	IK05
911401598247	BY778X LED200/CW SIA WB	IP65	IK05
911401598347	BY778X LED200/CW SIA NB	IP65	IK05
911401598447	BY778X LED250/NW SIA WB	IP65	IK05
911401598547	BY778X LED250/NW SIA NB	IP65	IK05
911401598647	BY778X LED250/CW SIA WB	IP65	IK05
911401598747	BY778X LED250/CW SIA NB	IP65	IK05
911401598847	BY778X LED300/NW SIA WB	IP65	IK05
911401598947	BY778X LED300/NW SIA NB	IP65	IK05
911401599047	BY778X LED300/CW SIA WB	IP65	IK05
911401599147	BY778X LED300/CW SIA NB	IP65	IK05
911401599247	BY778X LED350/NW SIA WB	IP65	IK05
911401599347	BY778X LED350/NW SIA NB	IP65	IK05
911401599447	BY778X LED350/CW SIA WB	IP65	IK05
911401599547	BY778X LED350/CW SIA NB	IP65	IK05
911401599647	BY778X LED400/NW SIA WB	IP65	IK05
911401599747	BY778X LED400/NW SIA NB	IP65	IK05
911401599847	BY778X LED400/CW SIA WB	IP65	IK05
911401599947	BY778X LED400/CW SIA NB	IP65	IK05
911401620609	BY778P LED100/NW PSU WB	IP66	IK08
911401620709	BY778P LED100/NW PSU NB	IP66	IK08
911401620809	BY778P LED100/CW PSU WB	IP66	IK08
911401620909	BY778P LED100/CW PSU NB	IP66	IK08
911401621009	BY778P LED150/NW PSU WB	IP66	IK08

Order Code	Full Product Name	Ingress protection code	Mech. impact protection code
911401621109	BY778P LED150/NW PSU NB	IP66	IK08
911401621209	BY778P LED150/CW PSU WB	IP66	IK08
911401621309	BY778P LED150/CW PSU NB	IP66	IK08
911401621409	BY778P LED200/NW PSU WB	IP66	IK08
911401621509	BY778P LED200/NW PSU NB	IP66	IK08
911401621609	BY778P LED200/CW PSU WB	IP66	IK08
911401621709	BY778P LED200/CW PSU NB	IP66	IK08
911401621809	BY778P LED250/NW PSU WB	IP66	IK08
911401621909	BY778P LED250/NW PSU NB	IP66	IK08
911401622009	BY778P LED250/CW PSU WB	IP66	IK08
911401622109	BY778P LED250/CW PSU NB	IP66	IK08
911401622209	BY778P LED300/NW PSU WB	IP66	IK08
911401622309	BY778P LED300/NW PSU NB	IP66	IK08
911401622409	BY778P LED300/CW PSU WB	IP66	IK08
911401622509	BY778P LED300/CW PSU NB	IP66	IK08
911401622609	BY778P LED350/NW PSU WB	IP66	IK08
911401622709	BY778P LED350/NW PSU NB	IP66	IK08
911401622809	BY778P LED350/CW PSU WB	IP66	IK08
911401622909	BY778P LED350/CW PSU NB	IP66	IK08
911401623009	BY778P LED400/NW PSU WB	IP66	IK08
911401623109	BY778P LED400/NW PSU NB	IP66	IK08
911401623209	BY778P LED400/CW PSU WB	IP66	IK08
911401623309	BY778P LED400/CW PSU NB	IP66	IK08

Approval and Application

Order Code	Full Product Name	Ambient temperature range
911401500048	BY778P LED175/940 PSU WB CAU	-30 to +50 °C
911401500148	BY778P LED175/940 PSU NB CAU	-30 to +50 °C
911401500248	BY778P LED175/965 PSU WB CAU	-30 to +50 °C
911401500348	BY778P LED175/965 PSU NB CAU	-30 to +50 °C
911401500448	BY778P LED220/940 PSU WB CAU	-30 to +50 °C
911401500548	BY778P LED220/940 PSU NB CAU	-30 to +50 °C
911401500648	BY778P LED220/965 PSU WB CAU	-30 to +50 °C
911401500748	BY778P LED220/965 PSU NB CAU	-30 to +50 °C
911401500848	BY778P LED260/940 PSU WB CAU	-30 to +50 °C
911401500948	BY778P LED260/940 PSU NB CAU	-30 to +50 °C
911401501048	BY778P LED260/965 PSU WB CAU	-30 to +50 °C
911401501148	BY778P LED260/965 PSU NB CAU	-30 to +50 °C
911401501248	BY778P LED310/940 PSU WB CAU	-30 to +50 °C
911401501348	BY778P LED310/940 PSU NB CAU	-30 to +50 °C
911401501448	BY778P LED310/965 PSU WB CAU	-30 to +50 °C

Order Code	Full Product Name	Ambient temperature range
911401501548	BY778P LED310/965 PSU NB CAU	-30 to +50 °C
911401501648	BY778P LED350/940 PSU WB CAU	-30 to +50 °C
911401501748	BY778P LED350/940 PSU NB CAU	-30 to +50 °C
911401501848	BY778P LED350/965 PSU WB CAU	-30 to +50 °C
911401501948	BY778P LED350/965 PSU NB CAU	-30 to +50 °C
911401502048	BY778P LED175/940 PSD WB CAU	-30 to +50 °C
911401502148	BY778P LED175/940 PSD NB CAU	-30 to +50 °C
911401502248	BY778P LED175/965 PSD WB CAU	-30 to +50 °C
911401502348	BY778P LED175/965 PSD NB CAU	-30 to +50 °C
911401502448	BY778P LED220/940 PSD WB CAU	-30 to +50 °C
911401502548	BY778P LED220/940 PSD NB CAU	-30 to +50 °C
911401502648	BY778P LED220/965 PSD WB CAU	-30 to +50 °C
911401502748	BY778P LED220/965 PSD NB CAU	-30 to +50 °C
911401502848	BY778P LED260/940 PSD WB CAU	-30 to +50 °C
911401502948	BY778P LED260/940 PSD NB CAU	-30 to +50 °C
911401503048	BY778P LED260/965 PSD WB CAU	-30 to +50 °C
911401503148	BY778P LED260/965 PSD NB CAU	-30 to +50 °C
911401503248	BY778P LED310/940 PSD WB CAU	-30 to +50 °C
911401503348	BY778P LED310/940 PSD NB CAU	-30 to +50 °C
911401503448	BY778P LED310/965 PSD WB CAU	-30 to +50 °C
911401503548	BY778P LED310/965 PSD NB CAU	-30 to +50 °C
911401503648	BY778P LED350/940 PSD WB CAU	-30 to +50 °C
911401503748	BY778P LED350/940 PSD NB CAU	-30 to +50 °C
911401503848	BY778P LED350/965 PSD WB CAU	-30 to +50 °C
911401503948	BY778P LED350/965 PSD NB CAU	-30 to +50 °C
911401504048	BY778X LED175/940 SIA WB CAU	-30 to +45 °C
911401504148	BY778X LED175/940 SIA NB CAU	-30 to +45 °C
911401504248	BY778X LED175/965 SIA WB CAU	-30 to +45 °C
911401504348	BY778X LED175/965 SIA NB CAU	-30 to +45 °C
911401504448	BY778X LED220/940 SIA WB CAU	-30 to +45 °C
911401504548	BY778X LED220/940 SIA NB CAU	-30 to +45 °C
911401504648	BY778X LED220/965 SIA WB CAU	-30 to +45 °C
911401504748	BY778X LED220/965 SIA NB CAU	-30 to +45 °C
911401504848	BY778X LED260/940 SIA WB CAU	-30 to +45 °C
911401504948	BY778X LED260/940 SIA NB CAU	-30 to +45 °C
911401505048	BY778X LED260/965 SIA WB CAU	-30 to +45 °C
911401505148	BY778X LED260/965 SIA NB CAU	-30 to +45 °C
911401505248	BY778X LED310/940 SIA WB CAU	-30 to +45 °C
911401505348	BY778X LED310/940 SIA NB CAU	-30 to +45 °C
911401505448	BY778X LED310/965 SIA WB CAU	-30 to +45 °C
911401505548	BY778X LED310/965 SIA NB CAU	-30 to +45 °C
911401505648	BY778X LED350/940 SIA WB CAU	-30 to +45 °C

Order Code	Full Product Name	Ambient temperature range
911401505748	BY778X LED350/940 SIA NB CAU	-30 to +45 °C
911401505848	BY778X LED350/965 SIA WB CAU	-30 to +45 °C
911401505948	BY778X LED350/965 SIA NB CAU	-30 to +45 °C
911401506048	BY778P LED200/850 PSD WB JP	-30 to +50 °C
911401506148	BY778P LED400/850 PSD WB JP	-30 to +50 °C
911401506248	BY778P LED105/TNW PSD WB	-30 to +50 °C
911401506348	BY778P LED150/TNW PSD WB	-30 to +50 °C
911401506448	BY778P LED200/TNW PSD WB	-30 to +50 °C
911401506548	BY778P LED255/TNW PSD WB	-30 to +50 °C
911401594447	BY778P LED100/NW PSD WB	-30 to +50 °C
911401594547	BY778P LED100/NW PSD NB	-30 to +50 °C
911401594647	BY778P LED100/CW PSD WB	-30 to +50 °C
911401594747	BY778P LED100/CW PSD NB	-30 to +50 °C
911401594847	BY778P LED150/NW PSD WB	-30 to +50 °C
911401594947	BY778P LED150/NW PSD NB	-30 to +50 °C
911401595047	BY778P LED150/CW PSD WB	-30 to +50 °C
911401595147	BY778P LED150/CW PSD NB	-30 to +50 °C
911401595247	BY778P LED200/NW PSD WB	-30 to +50 °C
911401595347	BY778P LED200/NW PSD NB	-30 to +50 °C
911401595447	BY778P LED200/CW PSD WB	-30 to +50 °C
911401595547	BY778P LED200/CW PSD NB	-30 to +50 °C
911401595647	BY778P LED250/NW PSD WB	-30 to +50 °C
911401595747	BY778P LED250/NW PSD NB	-30 to +50 °C
911401595847	BY778P LED250/CW PSD WB	-30 to +50 °C
911401595947	BY778P LED250/CW PSD NB	-30 to +50 °C
911401596047	BY778P LED300/NW PSD WB	-30 to +50 °C
911401596147	BY778P LED300/NW PSD NB	-30 to +50 °C
911401596247	BY778P LED300/CW PSD WB	-30 to +50 °C
911401596347	BY778P LED300/CW PSD NB	-30 to +50 °C
911401596447	BY778P LED350/NW PSD WB	-30 to +50 °C
911401596547	BY778P LED350/NW PSD NB	-30 to +50 °C
911401596647	BY778P LED350/CW PSD WB	-30 to +50 °C
911401596747	BY778P LED350/CW PSD NB	-30 to +50 °C
911401596847	BY778P LED400/NW PSD WB	-30 to +50 °C
911401596947	BY778P LED400/NW PSD NB	-30 to +50 °C
911401597047	BY778P LED400/CW PSD WB	-30 to +50 °C
911401597147	BY778P LED400/CW PSD NB	-30 to +50 °C
911401597247	BY778X LED100/NW SIA WB	-30 to +45 °C
911401597347	BY778X LED100/NW SIA NB	-30 to +45 °C
911401597447	BY778X LED100/CW SIA WB	-30 to +45 °C
911401597547	BY778X LED100/CW SIA NB	-30 to +45 °C
911401597647	BY778X LED150/NW SIA WB	-30 to +45 °C

Order Code	Full Product Name	Ambient temperature range
911401597747	BY778X LED150/NW SIA NB	-30 to +45 °C
911401597847	BY778X LED150/CW SIA WB	-30 to +45 °C
911401597947	BY778X LED150/CW SIA NB	-30 to +45 °C
911401598047	BY778X LED200/NW SIA WB	-30 to +45 °C
911401598147	BY778X LED200/NW SIA NB	-30 to +45 °C
911401598247	BY778X LED200/CW SIA WB	-30 to +45 °C
911401598347	BY778X LED200/CW SIA NB	-30 to +45 °C
911401598447	BY778X LED250/NW SIA WB	-30 to +45 °C
911401598547	BY778X LED250/NW SIA NB	-30 to +45 °C
911401598647	BY778X LED250/CW SIA WB	-30 to +45 °C
911401598747	BY778X LED250/CW SIA NB	-30 to +45 °C
911401598847	BY778X LED300/NW SIA WB	-30 to +45 °C
911401598947	BY778X LED300/NW SIA NB	-30 to +45 °C
911401599047	BY778X LED300/CW SIA WB	-30 to +45 °C
911401599147	BY778X LED300/CW SIA NB	-30 to +45 °C
911401599247	BY778X LED350/NW SIA WB	-30 to +45 °C
911401599347	BY778X LED350/NW SIA NB	-30 to +45 °C
911401599447	BY778X LED350/CW SIA WB	-30 to +45 °C
911401599547	BY778X LED350/CW SIA NB	-30 to +45 °C
911401599647	BY778X LED400/NW SIA WB	-30 to +45 °C
911401599747	BY778X LED400/NW SIA NB	-30 to +45 °C
911401599847	BY778X LED400/CW SIA WB	-30 to +45 °C
911401599947	BY778X LED400/CW SIA NB	-30 to +45 °C
911401620609	BY778P LED100/NW PSU WB	-40 to +50 °C
911401620709	BY778P LED100/NW PSU NB	-40 to +50 °C
911401620809	BY778P LED100/CW PSU WB	-40 to +50 °C
911401620909	BY778P LED100/CW PSU NB	-40 to +50 °C
911401621009	BY778P LED150/NW PSU WB	-40 to +50 °C
911401621109	BY778P LED150/NW PSU NB	-40 to +50 °C
911401621209	BY778P LED150/CW PSU WB	-40 to +50 °C
911401621309	BY778P LED150/CW PSU NB	-40 to +50 °C
911401621409	BY778P LED200/NW PSU WB	-40 to +50 °C
911401621509	BY778P LED200/NW PSU NB	-40 to +50 °C
911401621609	BY778P LED200/CW PSU WB	-40 to +50 °C
911401621709	BY778P LED200/CW PSU NB	-40 to +50 °C
911401621809	BY778P LED250/NW PSU WB	-40 to +50 °C
911401621909	BY778P LED250/NW PSU NB	-40 to +50 °C
911401622009	BY778P LED250/CW PSU WB	-40 to +50 °C
911401622109	BY778P LED250/CW PSU NB	-40 to +50 °C
911401622209	BY778P LED300/NW PSU WB	-40 to +50 °C
911401622309	BY778P LED300/NW PSU NB	-40 to +50 °C
911401622409	BY778P LED300/CW PSU WB	-40 to +50 °C

Order Code	Full Product Name	Ambient temperature range
911401622509	BY778P LED300/CW PSU NB	-40 to +50 °C
911401622609	BY778P LED350/NW PSU WB	-40 to +50 °C
911401622709	BY778P LED350/NW PSU NB	-40 to +50 °C
911401622809	BY778P LED350/CW PSU WB	-40 to +50 °C
911401622909	BY778P LED350/CW PSU NB	-40 to +50 °C
911401623009	BY778P LED400/NW PSU WB	-40 to +50 °C
911401623109	BY778P LED400/NW PSU NB	-40 to +50 °C
911401623209	BY778P LED400/CW PSU WB	-40 to +50 °C
911401623309	BY778P LED400/CW PSU NB	-40 to +50 °C

Initial Performance (IEC Compliant)

Order Code	Full Product Name	Initial chromaticity
911401500048	BY778P LED175/940 PSU WB CAU	(0.3818,0.3797) SDCM < 3
911401500148	BY778P LED175/940 PSU NB CAU	(0.3818,0.3797) SDCM < 3
911401500248	BY778P LED175/965 PSU WB CAU	(0.3123,0.3282) SDCM < 3
911401500348	BY778P LED175/965 PSU NB CAU	(0.3123,0.3282) SDCM < 3
911401500448	BY778P LED220/940 PSU WB CAU	(0.3818,0.3797) SDCM < 3
911401500548	BY778P LED220/940 PSU NB CAU	(0.3818,0.3797) SDCM < 3
911401500648	BY778P LED220/965 PSU WB CAU	(0.3123,0.3282) SDCM < 3
911401500748	BY778P LED220/965 PSU NB CAU	(0.3123,0.3282) SDCM < 3
911401500848	BY778P LED260/940 PSU WB CAU	(0.3818,0.3797) SDCM < 3
911401500948	BY778P LED260/940 PSU NB CAU	(0.3818,0.3797) SDCM < 3
911401501048	BY778P LED260/965 PSU WB CAU	(0.3123,0.3282) SDCM < 3
911401501148	BY778P LED260/965 PSU NB CAU	(0.3123,0.3282) SDCM < 3
911401501248	BY778P LED310/940 PSU WB CAU	(0.3818,0.3797) SDCM < 3
911401501348	BY778P LED310/940 PSU NB CAU	(0.3818,0.3797) SDCM < 3
911401501448	BY778P LED310/965 PSU WB CAU	(0.3123,0.3282) SDCM < 3
911401501548	BY778P LED310/965 PSU NB CAU	(0.3123,0.3282) SDCM < 3
911401501648	BY778P LED350/940 PSU WB CAU	(0.3818,0.3797) SDCM < 3
911401501748	BY778P LED350/940 PSU NB CAU	(0.3818,0.3797) SDCM < 3
911401501848	BY778P LED350/965 PSU WB CAU	(0.3123,0.3282) SDCM < 3
911401501948	BY778P LED350/965 PSU NB CAU	(0.3123,0.3282) SDCM < 3
911401502048	BY778P LED175/940 PSD WB CAU	(0.3818,0.3797) SDCM < 3
911401502148	BY778P LED175/940 PSD NB CAU	(0.3818,0.3797) SDCM < 3
911401502248	BY778P LED175/965 PSD WB CAU	(0.3123,0.3282) SDCM < 3
911401502348	BY778P LED175/965 PSD NB CAU	(0.3123,0.3282) SDCM < 3
911401502448	BY778P LED220/940 PSD WB CAU	(0.3818,0.3797) SDCM < 3
911401502548	BY778P LED220/940 PSD NB CAU	(0.3818,0.3797) SDCM < 3
911401502648	BY778P LED220/965 PSD WB CAU	(0.3123,0.3282) SDCM < 3
911401502748	BY778P LED220/965 PSD NB CAU	(0.3123,0.3282) SDCM < 3
911401502848	BY778P LED260/940 PSD WB CAU	(0.3818,0.3797) SDCM < 3

Order Code	Full Product Name	Initial chromaticity
911401502948	BY778P LED260/940 PSD NB CAU	(0.3818,0.3797) SDCM < 3
911401503048	BY778P LED260/965 PSD WB CAU	(0.3123,0.3282) SDCM < 3
911401503148	BY778P LED260/965 PSD NB CAU	(0.3123,0.3282) SDCM < 3
911401503248	BY778P LED310/940 PSD WB CAU	(0.3818,0.3797) SDCM < 3
911401503348	BY778P LED310/940 PSD NB CAU	(0.3818,0.3797) SDCM < 3
911401503448	BY778P LED310/965 PSD WB CAU	(0.3123,0.3282) SDCM < 3
911401503548	BY778P LED310/965 PSD NB CAU	(0.3123,0.3282) SDCM < 3
911401503648	BY778P LED350/940 PSD WB CAU	(0.3818,0.3797) SDCM < 3
911401503748	BY778P LED350/940 PSD NB CAU	(0.3818,0.3797) SDCM < 3
911401503848	BY778P LED350/965 PSD WB CAU	(0.3123,0.3282) SDCM < 3
911401503948	BY778P LED350/965 PSD NB CAU	(0.3123,0.3282) SDCM < 3
911401504048	BY778X LED175/940 SIA WB CAU	(0.3818,0.3797) SDCM < 3
911401504148	BY778X LED175/940 SIA NB CAU	(0.3818,0.3797) SDCM < 3
911401504248	BY778X LED175/965 SIA WB CAU	(0.3123,0.3282) SDCM < 3
911401504348	BY778X LED175/965 SIA NB CAU	(0.3123,0.3282) SDCM < 3
911401504448	BY778X LED220/940 SIA WB CAU	(0.3818,0.3797) SDCM < 3
911401504548	BY778X LED220/940 SIA NB CAU	(0.3818,0.3797) SDCM < 3
911401504648	BY778X LED220/965 SIA WB CAU	(0.3123,0.3282) SDCM < 3
911401504748	BY778X LED220/965 SIA NB CAU	(0.3123,0.3282) SDCM < 3
911401504848	BY778X LED260/940 SIA WB CAU	(0.3818,0.3797) SDCM < 3
911401504948	BY778X LED260/940 SIA NB CAU	(0.3818,0.3797) SDCM < 3
911401505048	BY778X LED260/965 SIA WB CAU	(0.3123,0.3282) SDCM < 3
911401505148	BY778X LED260/965 SIA NB CAU	(0.3123,0.3282) SDCM < 3
911401505248	BY778X LED310/940 SIA WB CAU	(0.3818,0.3797) SDCM < 3
911401505348	BY778X LED310/940 SIA NB CAU	(0.3818,0.3797) SDCM < 3
911401505448	BY778X LED310/965 SIA WB CAU	(0.3123,0.3282) SDCM < 3
911401505548	BY778X LED310/965 SIA NB CAU	(0.3123,0.3282) SDCM < 3
911401505648	BY778X LED350/940 SIA WB CAU	(0.3818,0.3797) SDCM < 3
911401505748	BY778X LED350/940 SIA NB CAU	(0.3818,0.3797) SDCM < 3
911401505848	BY778X LED350/965 SIA WB CAU	(0.3123,0.3282) SDCM < 3
911401505948	BY778X LED350/965 SIA NB CAU	(0.3123,0.3282) SDCM < 3
911401506048	BY778P LED200/850 PSD WB JP	(0.3446,0.3551) SDCM < 5
911401506148	BY778P LED400/850 PSD WB JP	(0.3446,0.3551) SDCM < 5
911401506248	BY778P LED105/TNW PSD WB	(0.3791,0.3717) SDCM < 3
911401506348	BY778P LED150/TNW PSD WB	(0.3791,0.3717) SDCM < 3
911401506448	BY778P LED200/TNW PSD WB	(0.3791,0.3717) SDCM < 3
911401506548	BY778P LED255/TNW PSD WB	(0.3791,0.3717) SDCM < 3
911401594447	BY778P LED100/NW PSD WB	(0.3818,0.3797) SDCM < 5
911401594547	BY778P LED100/NW PSD NB	(0.3818,0.3797) SDCM < 5
911401594647	BY778P LED100/CW PSD WB	(0.3123,0.3282) SDCM < 5
911401594747	BY778P LED100/CW PSD NB	(0.3123,0.3282) SDCM < 5
911401594847	BY778P LED150/NW PSD WB	(0.3818,0.3797) SDCM < 5

Order Code	Full Product Name	Initial chromaticity
911401594947	BY778P LED150/NW PSD NB	(0.3818,0.3797) SDCM < 5
911401595047	BY778P LED150/CW PSD WB	(0.3123,0.3282) SDCM < 5
911401595147	BY778P LED150/CW PSD NB	(0.3123,0.3282) SDCM < 5
911401595247	BY778P LED200/NW PSD WB	(0.3818,0.3797) SDCM < 5
911401595347	BY778P LED200/NW PSD NB	(0.3818,0.3797) SDCM < 5
911401595447	BY778P LED200/CW PSD WB	(0.3123,0.3282) SDCM < 5
911401595547	BY778P LED200/CW PSD NB	(0.3123,0.3282) SDCM < 5
911401595647	BY778P LED250/NW PSD WB	(0.3818,0.3797) SDCM < 5
911401595747	BY778P LED250/NW PSD NB	(0.3818,0.3797) SDCM < 5
911401595847	BY778P LED250/CW PSD WB	(0.3123,0.3282) SDCM < 5
911401595947	BY778P LED250/CW PSD NB	(0.3123,0.3282) SDCM < 5
911401596047	BY778P LED300/NW PSD WB	(0.3818,0.3797) SDCM < 5
911401596147	BY778P LED300/NW PSD NB	(0.3818,0.3797) SDCM < 5
911401596247	BY778P LED300/CW PSD WB	(0.3123,0.3282) SDCM < 5
911401596347	BY778P LED300/CW PSD NB	(0.3123,0.3282) SDCM < 5
911401596447	BY778P LED350/NW PSD WB	(0.3818,0.3797) SDCM < 5
911401596547	BY778P LED350/NW PSD NB	(0.3818,0.3797) SDCM < 5
911401596647	BY778P LED350/CW PSD WB	(0.3123,0.3282) SDCM < 5
911401596747	BY778P LED350/CW PSD NB	(0.3123,0.3282) SDCM < 5
911401596847	BY778P LED400/NW PSD WB	(0.3818,0.3797) SDCM < 5
911401596947	BY778P LED400/NW PSD NB	(0.3818,0.3797) SDCM < 5
911401597047	BY778P LED400/CW PSD WB	(0.3123,0.3282) SDCM < 5
911401597147	BY778P LED400/CW PSD NB	(0.3123,0.3282) SDCM < 5
911401597247	BY778X LED100/NW SIA WB	(0.3818,0.3797) SDCM < 5
911401597347	BY778X LED100/NW SIA NB	(0.3818,0.3797) SDCM < 5
911401597447	BY778X LED100/CW SIA WB	(0.3123,0.3282) SDCM < 5
911401597547	BY778X LED100/CW SIA NB	(0.3123,0.3282) SDCM < 5
911401597647	BY778X LED150/NW SIA WB	(0.3818,0.3797) SDCM < 5
911401597747	BY778X LED150/NW SIA NB	(0.3818,0.3797) SDCM < 5
911401597847	BY778X LED150/CW SIA WB	(0.3123,0.3282) SDCM < 5
911401597947	BY778X LED150/CW SIA NB	(0.3123,0.3282) SDCM < 5
911401598047	BY778X LED200/NW SIA WB	(0.3818,0.3797) SDCM < 5
911401598147	BY778X LED200/NW SIA NB	(0.3818,0.3797) SDCM < 5
911401598247	BY778X LED200/CW SIA WB	(0.3123,0.3282) SDCM < 5
911401598347	BY778X LED200/CW SIA NB	(0.3123,0.3282) SDCM < 5
911401598447	BY778X LED250/NW SIA WB	(0.3818,0.3797) SDCM < 5
911401598547	BY778X LED250/NW SIA NB	(0.3818,0.3797) SDCM < 5
911401598647	BY778X LED250/CW SIA WB	(0.3123,0.3282) SDCM < 5
911401598747	BY778X LED250/CW SIA NB	(0.3123,0.3282) SDCM < 5
911401598847	BY778X LED300/NW SIA WB	(0.3818,0.3797) SDCM < 5
911401598947	BY778X LED300/NW SIA NB	(0.3818,0.3797) SDCM < 5
911401599047	BY778X LED300/CW SIA WB	(0.3123,0.3282) SDCM < 5

Order Code	Full Product Name	Initial chromaticity
911401599147	BY778X LED300/CW SIA NB	(0.3123,0.3282) SDCM < 5
911401599247	BY778X LED350/NW SIA WB	(0.3818,0.3797) SDCM < 5
911401599347	BY778X LED350/NW SIA NB	(0.3818,0.3797) SDCM < 5
911401599447	BY778X LED350/CW SIA WB	(0.3123,0.3282) SDCM < 5
911401599547	BY778X LED350/CW SIA NB	(0.3123,0.3282) SDCM < 5
911401599647	BY778X LED400/NW SIA WB	(0.3818,0.3797) SDCM < 5
911401599747	BY778X LED400/NW SIA NB	(0.3818,0.3797) SDCM < 5
911401599847	BY778X LED400/CW SIA WB	(0.3123,0.3282) SDCM < 5
911401599947	BY778X LED400/CW SIA NB	(0.3123,0.3282) SDCM < 5
911401620609	BY778P LED100/NW PSU WB	(0.3818,0.3797) SDCM < 5
911401620709	BY778P LED100/NW PSU NB	(0.3818,0.3797) SDCM < 5
911401620809	BY778P LED100/CW PSU WB	(0.3123,0.3282) SDCM < 5
911401620909	BY778P LED100/CW PSU NB	(0.3123,0.3282) SDCM < 5
911401621009	BY778P LED150/NW PSU WB	(0.3818,0.3797) SDCM < 5
911401621109	BY778P LED150/NW PSU NB	(0.3818,0.3797) SDCM < 5
911401621209	BY778P LED150/CW PSU WB	(0.3123,0.3282) SDCM < 5
911401621309	BY778P LED150/CW PSU NB	(0.3123,0.3282) SDCM < 5
911401621409	BY778P LED200/NW PSU WB	(0.3818,0.3797) SDCM < 5
911401621509	BY778P LED200/NW PSU NB	(0.3818,0.3797) SDCM < 5
911401621609	BY778P LED200/CW PSU WB	(0.3123,0.3282) SDCM < 5
911401621709	BY778P LED200/CW PSU NB	(0.3123,0.3282) SDCM < 5
911401621809	BY778P LED250/NW PSU WB	(0.3818,0.3797) SDCM < 5
911401621909	BY778P LED250/NW PSU NB	(0.3818,0.3797) SDCM < 5
911401622009	BY778P LED250/CW PSU WB	(0.3123,0.3282) SDCM < 5
911401622109	BY778P LED250/CW PSU NB	(0.3123,0.3282) SDCM < 5
911401622209	BY778P LED300/NW PSU WB	(0.3818,0.3797) SDCM < 5
911401622309	BY778P LED300/NW PSU NB	(0.3818,0.3797) SDCM < 5
911401622409	BY778P LED300/CW PSU WB	(0.3123,0.3282) SDCM < 5
911401622509	BY778P LED300/CW PSU NB	(0.3123,0.3282) SDCM < 5
911401622609	BY778P LED350/NW PSU WB	(0.3818,0.3797) SDCM < 5
911401622709	BY778P LED350/NW PSU NB	(0.3818,0.3797) SDCM < 5
911401622809	BY778P LED350/CW PSU WB	(0.3123,0.3282) SDCM < 5
911401622909	BY778P LED350/CW PSU NB	(0.3123,0.3282) SDCM < 5
911401623009	BY778P LED400/NW PSU WB	(0.3818,0.3797) SDCM < 5
911401623109	BY778P LED400/NW PSU NB	(0.3818,0.3797) SDCM < 5
911401623209	BY778P LED400/CW PSU WB	(0.3123,0.3282) SDCM < 5
911401623309	BY778P LED400/CW PSU NB	(0.3123,0.3282) SDCM < 5

© 2026 Signify Holding. All rights reserved. The information provided herein is subject to change, without notice. Signify does not give any representation or warranty as to the accuracy or completeness of the information included herein and shall not be liable for any action in reliance thereon. The information presented in this document is not intended as any commercial offer and does not form part of any quotation or contract, unless otherwise agreed by Signify. Philips and the Philips Shield Emblem are registered trademarks of Koninklijke Philips N.V.