PHILIPS

DL252 G2 R Rd LED 400 40K 6W 4" WV

929002345501



External Slim Downlight DL252, 6 W, 400 lm, 4000 K, Beam angle 110°, White

Aluminum, White, Power supply unit (On/Off), 400 lm, 6 W, 66.00 lm/W, 4000 K, (0.3800 , , 0.3800) 6 SDCM, Beam angle 110°, Frosted, Polystyrene, IP20 | Finger-protected, IK03 | 0.3 J, Safety class II, Flying leads/wires

General Information

Light source replaceable	No
Number of gear units	1 unit
Driver included	Yes
Nominal lifetime	25,000 hour(s)
Switching Cycle	12,500
Lighting Technology	LED
Warranty period	1 years

Light Technical

Luminous Flux	400 lm
Correlated Color Temperature (Nom)	4000 K
Luminous Efficacy (rated) (Nom)	66.00 lm/W
Color rendering index (CRI)	80
Light source color	840 neutral white
Optic type	Beam angle 110°
Luminaire light beam spread	110°

Operating and Electrical

Input Voltage	110 to 240 V
Line Frequency	50 or 60 Hz
Input Frequency	50 or 60 Hz
Inrush current	13.4 A

Inrush time	0.5 ms
Power Consumption	6 W
Power Factor (Fraction)	0.5
Connection	Flying leads/wires
Suitable for random switching	Not applicable
Protection class IEC	Safety class II

Controls and Dimming

Dimmable	No
Driver/power unit/transformer	Power supply unit (On/Off)
Constant light output	No

Mechanical and Housing

Housing Material	Aluminum
Reflector material	-
Optic material	Polystyrene
Optical cover material	Polystyrene
Fixation material	Steel
Housing Color	White
Optical cover finish	Frosted
Overall length	120 mm
Overall width	120 mm
Overall height	20 mm
Overall diameter	120 mm
Dimensions (Height x Width x Depth)	20 x 120 x 120 mm
Net weight	0.15 kg
Ingress protection code	IP20 [Finger-protected]
Mech. impact protection code	IK03 [0.3 J]
Net Weight (Piece)	0.137 kg

Approval and Application

Glow-wire test	Temperature 650 °C, duration 30 s
Flammability mark	For mounting on normally flammable surfaces
EU RoHS compliant	Yes
Warranty	2 year(s)
EyeComfort	Yes
Ambient temperature range	-10 to +40 °C

Initial Performance (IEC Compliant)

Initial chromaticity	(0.3800 , , 0.3800) 6 SDCM

Over Time Performance (IEC Compliant)

Driver failure rate at 5000 h	0.015 %
Median useful life L70B50	25,000 hour(s)

Product Data

Order product name	DL252 G2 R Rd LED 400 40K 6W 4" WV
Full product name	DL252 G2 R Rd LED 400 40K 6W 4" WV
Full product code	871869974865400
Order code	929002345501
Material Nr. (12NC)	929002345501
Numerator - Quantity Per Pack	1
EAN/UPC - Product/Case	8718699748654
Numerator - Packs per outer box	20
EAN/UPC - Case	8718699748661

Dimensional drawing

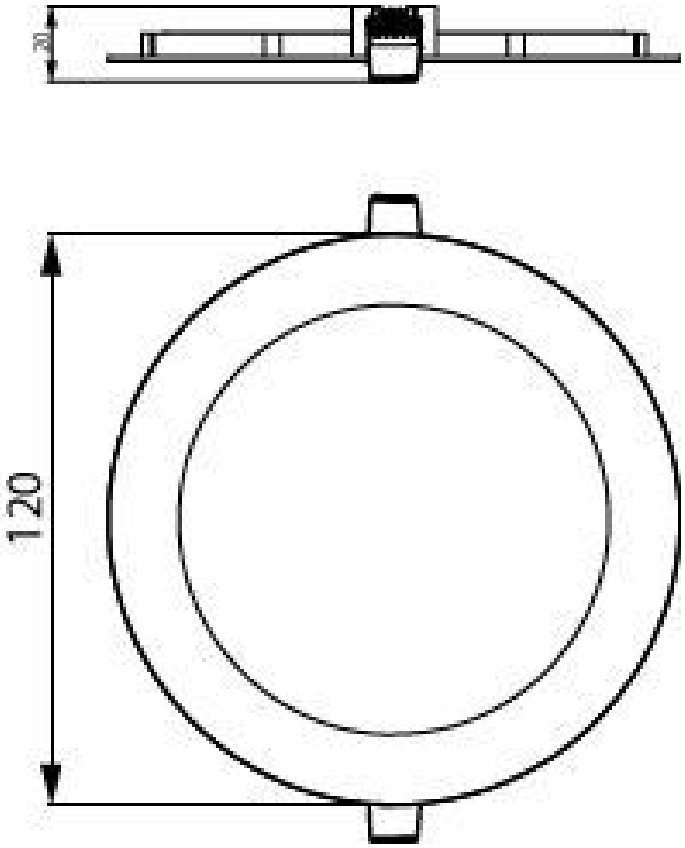

Photometric data

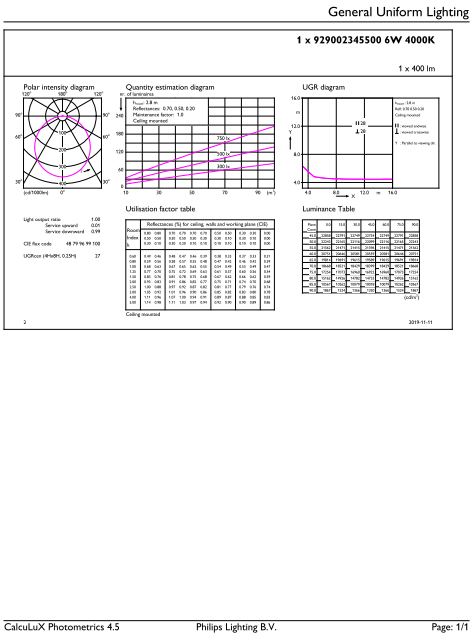
General Uniform Lighting

1 x 929002345500 6W 4000K

1 x 400 lm

Polar intensity diagram

Quantity estimation diagram

UGR diagram

Utilisation factor table

Luminance Table

CalcuLuX Photometrics 4.5 Philips Lighting B.V. Page: 1/1

General uniform lighting - DL252 G2 R Rd LED 400 40K 6W 4" WV

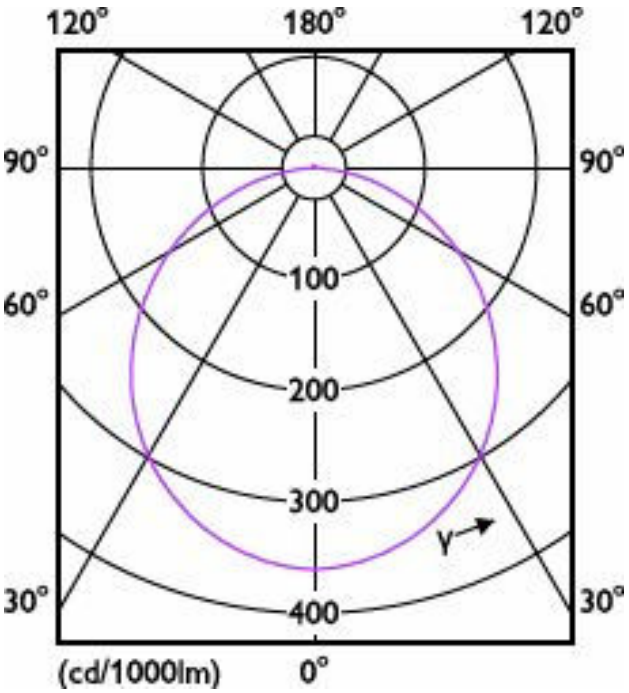

Light Distribution Diagram - DL252 G2 R Rd LED 400 40K 6W 4" WV

Lifetime

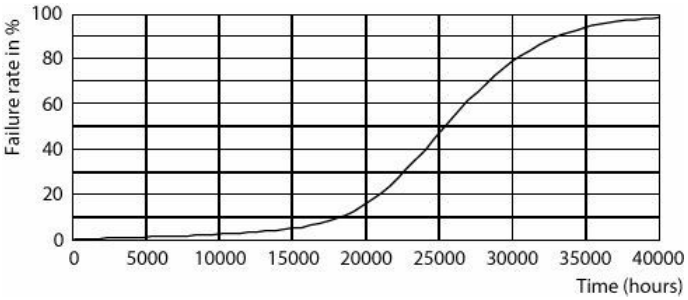

L70B-50 25K-LED

Related Documents

Documents and certificates	Document Name	Download
Environmental Product Declaration	Philips-DL252-G2-DL252-Ref-929002345701-EPD.pdf	Download

Photometry and lighting design	Document Name	Download
IES File	Downlight_DL252_G2_LED_R_RD_400lm_40K-IES.ies	Download

© 2026 Signify Holding. All rights reserved. The information provided herein is subject to change, without notice. Signify does not give any representation or warranty as to the accuracy or completeness of the information included herein and shall not be liable for any action in reliance thereon. The information presented in this document is not intended as any commercial offer and does not form part of any quotation or contract, unless otherwise agreed by Signify. Philips and the Philips Shield Emblem are registered trademarks of Koninklijke Philips N.V.