PHILIPS

Lighting



GreenSpace Flex Luna – Bringing moonlight inside.

GreenSpace Flex Luna

Ever-changing yet dependable, the moon reflects the very essence of hospitality lighting, which is adaptable, elegant, and always in tune with its surroundings. GreenSpace Flex Luna is designed to evoke a unique sensation. Like the moon, Luna does not overpower but enhances its surroundings, casting a glow that feels both intimate and grand. It is not just a light. It is an intimate experience.

Benefits

- Sustainable, more light with less energy consumption, up to 120lm/W.
- Silent brilliance with superior visual comfort.
- Deliver light that speaks luxury, supported by superior color consistency and beam control.
- Comprehensive family offering, maintain effortlessly with ceiling proof design.

Features

- Leading lm/W, up to 120lm/W on luminaire level.
- 40° cut off angle and UGR19 for major variants.
- Leading color performance, with CRI92, R9>50.
- Super color consistency, SDCM 3 on luminaire level and SDCM 2 on COB level.
- Modular design concept, supporting strong customization and flexibility on family level, covering cut out(D35 to D100), optics (12° to 55°), controls (PSU, PSD, 1-10V, WIA) and customized reflector and front ring color options.

Application

- Hospitality
- Retail
- Offices
- General indoor space

GreenSpace Flex Luna

Versions



GreenSpace Flex Luna

Dimensional drawing

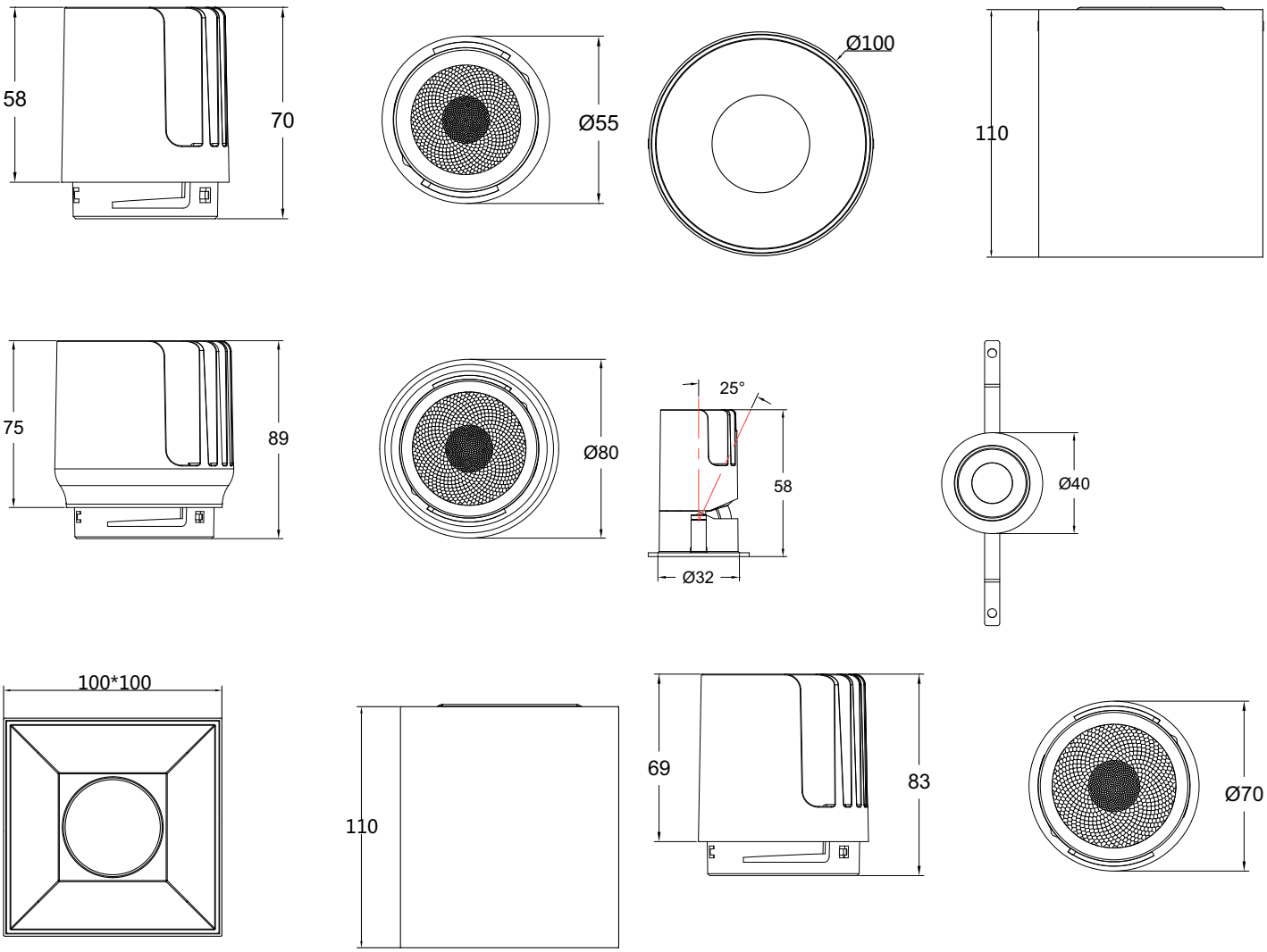

Dimensional drawing

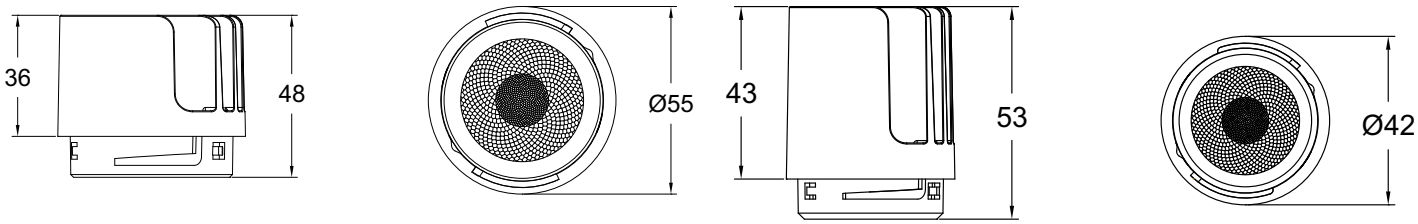

Operating and Electrical	
Protection class IEC	Safety class II
Input Voltage	220 to 240 V
Line Frequency	50 or 60 Hz
Mechanical and Housing	
Optical cover type	Lens
Housing Color	Black
Mech. impact protection code	IK03
Approval and Application	
Ambient temperature range	-20 to +45 °C
Initial Performance (IEC Compliant)	
Luminous flux tolerance	-10% / +10%

Light Technical

Order Code	Full Product Name	Correlated Color Temperature (Nom)	Color rendering index (CRI)	Luminous Efficacy (rated) (Nom)	Luminous Flux
911401521646	SM378B R P8 927 PSU-E NB D100 G-TT PRO	2700 K	92	122 lm/W	955 lm
911401521746	SM378B R P8 930 PSU-E NB D100 G-TT PRO	3000 K	92	130 lm/W	1,015 lm
911401521846	SM378B R P8 940 PSU-E NB D100 G-TT PRO	4000 K	92	134 lm/W	1,045 lm
911401521946	SM378B R P8 927 PSU-E MB D100 G-TT PRO	2700 K	92	115 lm/W	900 lm
911401522046	SM378B R P8 930 PSU-E MB D100 G-TT PRO	3000 K	92	124 lm/W	965 lm
911401522146	SM378B R P8 940 PSU-E MB D100 G-TT PRO	4000 K	92	127 lm/W	990 lm
911401522246	SM378B R P8 927 PSU-E WB D100 G-TT PRO	2700 K	92	112 lm/W	875 lm
911401522346	SM378B R P8 930 PSU-E WB D100 G-TT PRO	3000 K	92	119 lm/W	930 lm
911401522446	SM378B R P8 940 PSU-E WB D100 G-TT PRO	4000 K	92	122 lm/W	955 lm
911401522546	SM378B R P11 927 PSU-E NB D100 G-TT PRO	2700 K	92	121 lm/W	1,390 lm
911401522646	SM378B R P11 930 PSU-E NB D100 G-TT PRO	3000 K	92	129 lm/W	1,480 lm
911401522746	SM378B R P11 940 PSU-E NB D100 G-TT PRO	4000 K	92	133 lm/W	1,525 lm
911401522846	SM378B R P11 927 PSU-E MB D100 G-TT PRO	2700 K	92	115 lm/W	1,325 lm
911401522946	SM378B R P11 930 PSU-E MB D100 G-TT PRO	3000 K	92	123 lm/W	1,415 lm
911401523046	SM378B R P11 940 PSU-E MB D100 G-TT PRO	4000 K	92	126 lm/W	1,450 lm
911401523146	SM378B R P11 927 PSU-E WB D100 G-TT PRO	2700 K	92	111 lm/W	1,280 lm
911401523246	SM378B R P11 930 PSU-E WB D100 G-TT PRO	3000 K	92	118 lm/W	1,360 lm

Order Code	Full Product Name	Correlated Color Temperature (Nom)	Color rendering index (CRI)	Luminous Efficacy (rated) (Nom)	Luminous Flux
911401523346	SM378B R P11 940 PSU-E WB D100 G-TT PRO	4000 K	92	122 lm/W	1,400 lm
911401523446	SM378B R P13 927 PSU-E NB D100 G-TT PRO	2700 K	92	118 lm/W	1,590 lm
911401523546	SM378B R P13 930 PSU-E NB D100 G-TT PRO	3000 K	92	125 lm/W	1,690 lm
911401523646	SM378B R P13 940 PSU-E NB D100 G-TT PRO	4000 K	92	129 lm/W	1,740 lm
911401523746	SM378B R P13 927 PSU-E MB D100 G-TT PRO	2700 K	92	112 lm/W	1,510 lm
911401523846	SM378B R P13 930 PSU-E MB D100 G-TT PRO	3000 K	92	120 lm/W	1,615 lm
911401523946	SM378B R P13 940 PSU-E MB D100 G-TT PRO	4000 K	92	123 lm/W	1,655 lm
911401524046	SM378B R P13 927 PSU-E WB D100 G-TT PRO	2700 K	92	109 lm/W	1,470 lm
911401524146	SM378B R P13 930 PSU-E WB D100 G-TT PRO	3000 K	92	116 lm/W	1,565 lm
911401524246	SM378B R P13 940 PSU-E WB D100 G-TT PRO	4000 K	92	120 lm/W	1,615 lm
911401524346	SM378B R P20 927 PSU-E NB D100 G-TT PRO	2700 K	92	106 lm/W	2,115 lm
911401524446	SM378B R P20 930 PSU-E NB D100 G-TT PRO	3000 K	92	113 lm/W	2,250 lm
911401524546	SM378B R P20 940 PSU-E NB D100 G-TT PRO	4000 K	92	116 lm/W	2,315 lm
911401524646	SM378B R P20 927 PSU-E MB D100 G-TT PRO	2700 K	92	101 lm/W	2,015 lm
911401524746	SM378B R P20 930 PSU-E MB D100 G-TT PRO	3000 K	92	108 lm/W	2,150 lm
911401524846	SM378B R P20 940 PSU-E MB D100 G-TT PRO	4000 K	92	110 lm/W	2,205 lm
911401524946	SM378B R P20 927 PSU-E WB D100 G-TT PRO	2700 K	92	98 lm/W	1,955 lm
911401525046	SM378B R P20 930 PSU-E WB D100 G-TT PRO	3000 K	92	104 lm/W	2,080 lm
911401525146	SM378B R P20 940 PSU-E WB D100 G-TT PRO	4000 K	92	108 lm/W	2,150 lm
911401525246	SM378B R P20 927 PSD-E NB D100 G-TT PRO	2700 K	92	103 lm/W	2,115 lm
911401525346	SM378B R P20 930 PSD-E NB D100 G-TT PRO	3000 K	92	110 lm/W	2,250 lm
911401525446	SM378B R P20 940 PSD-E NB D100 G-TT PRO	4000 K	92	113 lm/W	2,315 lm
911401525546	SM378B R P20 927 PSD-E MB D100 G-TT PRO	2700 K	92	98 lm/W	2,015 lm
911401525646	SM378B R P20 930 PSD-E MB D100 G-TT PRO	3000 K	92	105 lm/W	2,150 lm
911401525746	SM378B R P20 940 PSD-E MB D100 G-TT PRO	4000 K	92	108 lm/W	2,205 lm

Order Code	Full Product Name	Correlated Color Temperature (Nom)	Color rendering index (CRI)	Luminous Efficacy (rated) (Nom)	Luminous Flux
911401525846	SM378B R P20 927 PSD-E WB D100 G-TT PRO	2700 K	92	95 lm/W	1,955 lm
911401525946	SM378B R P20 930 PSD-E WB D100 G-TT PRO	3000 K	92	101 lm/W	2,080 lm
911401526046	SM378B R P20 940 PSD-E WB D100 G-TT PRO	4000 K	92	105 lm/W	2,150 lm
911401526146	SM378B R P8 927 PSD-E NB D100 G-TT PRO	2700 K	92	106 lm/W	955 lm
911401526246	SM378B R P8 930 PSD-E NB D100 G-TT PRO	3000 K	92	113 lm/W	1,015 lm
911401526346	SM378B R P8 940 PSD-E NB D100 G-TT PRO	4000 K	92	116 lm/W	1,045 lm
911401526446	SM378B R P8 927 PSD-E MB D100 G-TT PRO	2700 K	92	100 lm/W	900 lm
911401526546	SM378B R P8 930 PSD-E MB D100 G-TT PRO	3000 K	92	107 lm/W	965 lm
911401526646	SM378B R P8 940 PSD-E MB D100 G-TT PRO	4000 K	92	110 lm/W	990 lm
911401526746	SM378B R P8 927 PSD-E WB D100 G-TT PRO	2700 K	92	97 lm/W	875 lm
911401526846	SM378B R P8 930 PSD-E WB D100 G-TT PRO	3000 K	92	103 lm/W	930 lm
911401526946	SM378B R P8 940 PSD-E WB D100 G-TT PRO	4000 K	92	106 lm/W	955 lm
911401527046	SM378B R P12 927 PSD-E NB D100 G-TT PRO	2700 K	92	107 lm/W	1,390 lm
911401527146	SM378B R P12 930 PSD-E NB D100 G-TT PRO	3000 K	92	114 lm/W	1,480 lm
911401527246	SM378B R P12 940 PSD-E NB D100 G-TT PRO	4000 K	92	117 lm/W	1,525 lm
911401527346	SM378B R P12 927 PSD-E MB D100 G-TT PRO	2700 K	92	102 lm/W	1,325 lm
911401527446	SM378B R P12 930 PSD-E MB D100 G-TT PRO	3000 K	92	109 lm/W	1,415 lm
911401527546	SM378B R P12 940 PSD-E MB D100 G-TT PRO	4000 K	92	112 lm/W	1,450 lm
911401527646	SM378B R P12 927 PSD-E WB D100 G-TT PRO	2700 K	92	98 lm/W	1,280 lm
911401527746	SM378B R P12 930 PSD-E WB D100 G-TT PRO	3000 K	92	105 lm/W	1,360 lm
911401527846	SM378B R P12 940 PSD-E WB D100 G-TT PRO	4000 K	92	108 lm/W	1,400 lm
911401527946	SM378B R P14 927 PSD-E NB D100 G-TT PRO	2700 K	92	110 lm/W	1,590 lm
911401528046	SM378B R P14 930 PSD-E NB D100 G-TT PRO	3000 K	92	117 lm/W	1,690 lm
911401528146	SM378B R P14 940 PSD-E NB D100 G-TT PRO	4000 K	92	120 lm/W	1,740 lm
911401528246	SM378B R P14 927 PSD-E MB D100 G-TT PRO	2700 K	92	104 lm/W	1,510 lm

Order Code	Full Product Name	Correlated Color Temperature (Nom)	Color rendering index (CRI)	Luminous Efficacy (rated) (Nom)	Luminous Flux
911401528346	SM378B R P14 930 PSD-E MB D100 G-TT PRO	3000 K	92	111 lm/W	1,615 lm
911401528446	SM378B R P14 940 PSD-E MB D100 G-TT PRO	4000 K	92	114 lm/W	1,655 lm
911401528546	SM378B R P14 927 PSD-E WB D100 G-TT PRO	2700 K	92	101 lm/W	1,470 lm
911401528646	SM378B R P14 930 PSD-E WB D100 G-TT PRO	3000 K	92	108 lm/W	1,565 lm
911401528746	SM378B R P14 940 PSD-E WB D100 G-TT PRO	4000 K	92	111 lm/W	1,615 lm
911401528846	SM378X R P8 930 WIA MB D100 G-TT PRO	3000 K	92	118 lm/W	965 lm
911401528946	SM378X R P8 930 WIA WB D100 G-TT PRO	3000 K	92	113 lm/W	930 lm
911401529046	SM378X R P12 930 WIA MB D100 G-TT PRO	3000 K	92	118 lm/W	1,415 lm
911401529146	SM378X R P12 930 WIA WB D100 G-TT PRO	3000 K	92	113 lm/W	1,360 lm
911401529246	SM378X R P14 930 WIA MB D100 G-TT PRO	3000 K	92	115 lm/W	1,615 lm
911401529346	SM378X R P14 930 WIA WB D100 G-TT PRO	3000 K	92	112 lm/W	1,565 lm
911401529446	SM378X R P20 930 WIA MB D100 G-TT PRO	3000 K	92	108 lm/W	2,150 lm
911401529546	SM378X R P20 930 WIA WB D100 G-TT PRO	3000 K	92	104 lm/W	2,080 lm
911401529646	SM378B R P9 PSD-TNW NB D100 G-TT PRO	Tunable White	90	86 lm/W	770 lm
911401529746	SM378B R P9 PSD-TNW MB D100 G-TT PRO	Tunable White	90	86 lm/W	770 lm
911401529846	SM378B R P9 PSD-TNW WB D100 G-TT PRO	Tunable White	90	83 lm/W	750 lm
911401529946	SM378B R P12 PSD-TNW NB D100 G-TT PRO	Tunable White	90	85 lm/W	1,110 lm
911401530046	SM378B R P12 PSD-TNW MB D100 G-TT PRO	Tunable White	90	84 lm/W	1,090 lm
911401530146	SM378B R P12 PSD-TNW WB D100 G-TT PRO	Tunable White	90	82 lm/W	1,070 lm
911401530246	SM378B R P15 PSD-TNW NB D100 G-TT PRO	Tunable White	90	85 lm/W	1,320 lm
911401530346	SM378B R P15 PSD-TNW MB D100 G-TT PRO	Tunable White	90	84 lm/W	1,300 lm
911401530446	SM378B R P15 PSD-TNW WB D100 G-TT PRO	Tunable White	90	82 lm/W	1,270 lm
911401530546	SM378B R P22 PSD-TNW NB D100 G-TT PRO	Tunable White	90	82 lm/W	1,800 lm
911401530646	SM378B R P22 PSD-TNW MB D100 G-TT PRO	Tunable White	90	81 lm/W	1,780 lm
911401530746	SM378B R P22 PSD-TNW WB D100 G-TT PRO	Tunable White	90	79 lm/W	1,740 lm

Order Code	Full Product Name	Correlated Color Temperature (Nom)	Color rendering index (CRI)	Luminous Efficacy (rated) (Nom)	Luminous Flux
911401500046	RS378B P7 930 PSD-E WB M43 PRO	3000 K	92	81 lm/W	600 lm
911401500146	RS378B P7 940 PSD-E WB M43 PRO	4000 K	92	89 lm/W	660 lm
911401500246	RS378B P6 930 PSU-E MB M43 WP PRO	3000 K	92	92 lm/W	540 lm
911401500346	RS378B P6 930 PSU-E WB M43 WP PRO	3000 K	92	92 lm/W	545 lm
911401500446	RS378B P8 930 PSU-E MB M43 WP PRO	3000 K	92	86 lm/W	685 lm
911401500546	RS378B P8 930 PSU-E WB M43 WP PRO	3000 K	92	88 lm/W	705 lm
911401520146	RS378B P7 PSD-TNW NB M43 PRO	Tunable White	90	71 lm/W	530 lm
911401520246	RS378B P7 PSD-TNW MB M43 PRO	Tunable White	90	71 lm/W	530 lm
911401520346	RS378B P7 PSD-TNW WB M43 PRO	Tunable White	90	77 lm/W	580 lm
911401596945	RS378B P6 927 PSU-E SNB M43 PRO	2700 K	92	73 lm/W	475 lm
911401597045	RS378B P6 930 PSU-E SNB M43 PRO	3000 K	92	78 lm/W	510 lm
911401597145	RS378B P6 940 PSU-E SNB M43 PRO	4000 K	92	83 lm/W	540 lm
911401597245	RS378B P6 927 PSU-E NB M43 PRO	2700 K	92	85 lm/W	500 lm
911401597345	RS378B P6 930 PSU-E NB M43 PRO	3000 K	92	90 lm/W	530 lm
911401597445	RS378B P6 940 PSU-E NB M43 PRO	4000 K	92	93 lm/W	550 lm
911401597545	RS378B P6 927 PSU-E MB M43 PRO	2700 K	92	86 lm/W	510 lm
911401597645	RS378B P6 930 PSU-E MB M43 PRO	3000 K	92	92 lm/W	540 lm
911401597745	RS378B P6 940 PSU-E MB M43 PRO	4000 K	92	99 lm/W	585 lm
911401597845	RS378B P6 927 PSU-E WB M43 PRO	2700 K	92	89 lm/W	525 lm
911401597945	RS378B P6 930 PSU-E WB M43 PRO	3000 K	92	92 lm/W	545 lm
911401598045	RS378B P6 940 PSU-E WB M43 PRO	4000 K	92	102 lm/W	600 lm
911401598145	RS378B P8 927 PSU-E NB M43 PRO	2700 K	92	78 lm/W	625 lm
911401598245	RS378B P8 930 PSU-E NB M43 PRO	3000 K	92	83 lm/W	665 lm
911401598345	RS378B P8 940 PSU-E NB M43 PRO	4000 K	92	88 lm/W	705 lm
911401598445	RS378B P8 927 PSU-E MB M43 PRO	2700 K	92	81 lm/W	645 lm

Order Code	Full Product Name	Correlated Color Temperature (Nom)	Color rendering index (CRI)	Luminous Efficacy (rated) (Nom)	Luminous Flux
911401598545	RS378B P8 930 PSU-E MB M43 PRO	3000 K	92	86 lm/W	685 lm
911401598645	RS378B P8 940 PSU-E MB M43 PRO	4000 K	92	91 lm/W	725 lm
911401598745	RS378B P8 927 PSU-E WB M43 PRO	2700 K	92	83 lm/W	665 lm
911401598845	RS378B P8 930 PSU-E WB M43 PRO	3000 K	92	88 lm/W	705 lm
911401598945	RS378B P8 940 PSU-E WB M43 PRO	4000 K	92	94 lm/W	750 lm
911401599045	RS378B P7 927 PSD-E SNB M43 PRO	2700 K	92	70 lm/W	525 lm
911401599145	RS378B P7 930 PSD-E SNB M43 PRO	3000 K	92	74 lm/W	555 lm
911401599245	RS378B P7 940 PSD-E SNB M43 PRO	4000 K	92	79 lm/W	595 lm
911401599345	RS378B P7 927 PSD-E NB M43 PRO	2700 K	92	74 lm/W	550 lm
911401599445	RS378B P7 930 PSD-E NB M43 PRO	3000 K	92	79 lm/W	585 lm
911401599545	RS378B P7 940 PSD-E NB M43 PRO	4000 K	92	82 lm/W	605 lm
911401599645	RS378B P7 927 PSD-E MB M43 PRO	2700 K	92	76 lm/W	560 lm
911401599745	RS378B P7 930 PSD-E MB M43 PRO	3000 K	92	80 lm/W	595 lm
911401599845	RS378B P7 940 PSD-E MB M43 PRO	4000 K	92	87 lm/W	645 lm
911401599945	RS378B P7 927 PSD-E WB M43 PRO	2700 K	92	78 lm/W	575 lm
911401500646	RS378B P7 927 PSU-E SNB M55 PRO	2700 K	92	86 lm/W	620 lm
911401500746	RS378B P7 930 PSU-E SNB M55 PRO	3000 K	92	92 lm/W	660 lm
911401500846	RS378B P7 940 PSU-E SNB M55 PRO	4000 K	92	97 lm/W	700 lm
911401500946	RS378B P7 927 PSU-E NB M55 PRO	2700 K	92	105 lm/W	745 lm
911401501046	RS378B P7 930 PSU-E NB M55 PRO	3000 K	92	112 lm/W	795 lm
911401501146	RS378B P7 940 PSU-E NB M55 PRO	4000 K	92	115 lm/W	820 lm
911401501246	RS378B P7 927 PSU-E MB M55 PRO	2700 K	92	108 lm/W	765 lm
911401501346	RS378B P7 930 PSU-E MB M55 PRO	3000 K	92	114 lm/W	810 lm
911401501446	RS378B P7 940 PSU-E MB M55 PRO	4000 K	92	118 lm/W	835 lm
911401501546	RS378B P7 927 PSU-E WB M55 PRO	2700 K	92	111 lm/W	785 lm

Order Code	Full Product Name	Correlated Color Temperature (Nom)	Color rendering index (CRI)	Luminous Efficacy (rated) (Nom)	Luminous Flux
911401501646	RS378B P7 930 PSU-E WB M55 PRO	3000 K	92	116 lm/W	825 lm
911401501746	RS378B P7 940 PSU-E WB M55 PRO	4000 K	92	121 lm/W	860 lm
911401501846	RS378B P8 927 PSU-E SNB M55 PRO	2700 K	92	83 lm/W	665 lm
911401501946	RS378B P8 930 PSU-E SNB M55 PRO	3000 K	92	88 lm/W	705 lm
911401502046	RS378B P8 940 PSU-E SNB M55 PRO	4000 K	92	93 lm/W	745 lm
911401502146	RS378B P9 927 PSU-E NB M55 PRO	2700 K	92	99 lm/W	890 lm
911401502246	RS378B P9 930 PSU-E NB M55 PRO	3000 K	92	106 lm/W	950 lm
911401502346	RS378B P9 940 PSU-E NB M55 PRO	4000 K	92	109 lm/W	980 lm
911401502446	RS378B P9 927 PSU-E MB M55 PRO	2700 K	92	102 lm/W	920 lm
911401502546	RS378B P9 930 PSU-E MB M55 PRO	3000 K	92	109 lm/W	980 lm
911401502646	RS378B P9 940 PSU-E MB M55 PRO	4000 K	92	111 lm/W	1,000 lm
911401502746	RS378B P9 927 PSU-E WB M55 PRO	2700 K	92	106 lm/W	950 lm
911401502846	RS378B P9 930 PSU-E WB M55 PRO	3000 K	92	111 lm/W	1,000 lm
911401502946	RS378B P9 940 PSU-E WB M55 PRO	4000 K	92	114 lm/W	1,030 lm
911401504846	RS378B P7 927 PSD-E SNB M55 PRO	2700 K	92	77 lm/W	580 lm
911401504946	RS378B P7 930 PSD-E SNB M55 PRO	3000 K	92	84 lm/W	630 lm
911401505046	RS378B P7 940 PSD-E SNB M55 PRO	4000 K	92	87 lm/W	655 lm
911401505146	RS378B P7 927 PSD-E NB M55 PRO	2700 K	92	96 lm/W	700 lm
911401505246	RS378B P7 930 PSD-E NB M55 PRO	3000 K	92	102 lm/W	745 lm
911401505346	RS378B P7 940 PSD-E NB M55 PRO	4000 K	92	105 lm/W	770 lm
911401505446	RS378B P7 927 PSD-E MB M55 PRO	2700 K	92	98 lm/W	715 lm
911401505546	RS378B P7 930 PSD-E MB M55 PRO	3000 K	92	104 lm/W	760 lm
911401505646	RS378B P7 940 PSD-E MB M55 PRO	4000 K	92	107 lm/W	780 lm
911401505746	RS378B P7 927 PSD-E WB M55 PRO	2700 K	92	101 lm/W	735 lm
911401505846	RS378B P7 930 PSD-E WB M55 PRO	3000 K	92	105 lm/W	770 lm

Order Code	Full Product Name	Correlated Color Temperature (Nom)	Color rendering index (CRI)	Luminous Efficacy (rated) (Nom)	Luminous Flux
911401505946	RS378B P7 940 PSD-E WB M55 PRO	4000 K	92	110 lm/W	805 lm
911401506046	RS378B P9 927 PSD-E NB M55 PRO	2700 K	92	94 lm/W	890 lm
911401506146	RS378B P9 930 PSD-E NB M55 PRO	3000 K	92	100 lm/W	950 lm
911401506246	RS378B P9 940 PSD-E NB M55 PRO	4000 K	92	103 lm/W	980 lm
911401506346	RS378B P9 927 PSD-E MB M55 PRO	2700 K	92	97 lm/W	920 lm
911401506446	RS378B P9 930 PSD-E MB M55 PRO	3000 K	92	103 lm/W	980 lm
911401506546	RS378B P9 940 PSD-E MB M55 PRO	4000 K	92	105 lm/W	1,000 lm
911401506646	RS378B P9 927 PSD-E WB M55 PRO	2700 K	92	100 lm/W	950 lm
911401506746	RS378B P9 930 PSD-E WB M55 PRO	3000 K	92	105 lm/W	1,000 lm
911401506846	RS378B P9 940 PSD-E WB M55 PRO	4000 K	92	108 lm/W	1,030 lm
911401508746	RS378X P9 930 WIA MB M55 PRO	3000 K	92	113 lm/W	980 lm
911401508846	RS378X P9 930 WIA WB M55 PRO	3000 K	92	115 lm/W	1,000 lm
911401509346	RS378B P7 930 PSU-E MB M55 WP PRO	3000 K	92	114 lm/W	810 lm
911401509446	RS378B P7 930 PSU-E WB M55 WP PRO	3000 K	92	116 lm/W	825 lm
911401509546	RS378B P9 930 PSU-E MB M55 WP PRO	3000 K	92	109 lm/W	980 lm
911401509646	RS378B P9 930 PSU-E WB M55 WP PRO	3000 K	92	111 lm/W	1,000 lm
911401518946	RS378B P7 PSD-TNW NB M55 PRO	Tunable White	90	73 lm/W	520 lm
911401519046	RS378B P7 PSD-TNW MB M55 PRO	Tunable White	90	75 lm/W	530 lm
911401519146	RS378B P7 PSD-TNW WB M55 PRO	Tunable White	90	77 lm/W	550 lm
911401519246	RS378B P9 PSD-TNW NB M55 PRO	Tunable White	90	72 lm/W	650 lm
911401519346	RS378B P9 PSD-TNW MB M55 PRO	Tunable White	90	74 lm/W	670 lm
911401519446	RS378B P9 PSD-TNW WB M55 PRO	Tunable White	90	77 lm/W	690 lm
911401595145	RS378B P3 927 PSU-E MB D35 G-TT PRO	2700 K	92	74 lm/W	230 lm
911401595245	RS378B P3 930 PSU-E MB D35 G-TT PRO	3000 K	92	79 lm/W	245 lm
911401595345	RS378B P3 940 PSU-E MB D35 G-TT PRO	4000 K	92	84 lm/W	260 lm

Order Code	Full Product Name	Correlated Color Temperature (Nom)	Color rendering index (CRI)	Luminous Efficacy (rated) (Nom)	Luminous Flux
911401595445	RS378B P3 927 PSU-E WB D35 G-TT PRO	2700 K	92	71 lm/W	220 lm
911401595545	RS378B P3 930 PSU-E WB D35 G-TT PRO	3000 K	92	79 lm/W	245 lm
911401595645	RS378B P3 940 PSU-E WB D35 G-TT PRO	4000 K	92	81 lm/W	250 lm
911401595745	RS378B P5 927 PSU-E MB D35 G-TT PRO	2700 K	92	73 lm/W	345 lm
911401595845	RS378B P5 930 PSU-E MB D35 G-TT PRO	3000 K	92	79 lm/W	370 lm
911401595945	RS378B P5 940 PSU-E MB D35 G-TT PRO	4000 K	92	83 lm/W	390 lm
911401596045	RS378B P5 927 PSU-E WB D35 G-TT PRO	2700 K	92	72 lm/W	340 lm
911401596145	RS378B P5 930 PSU-E WB D35 G-TT PRO	3000 K	92	78 lm/W	365 lm
911401596245	RS378B P5 940 PSU-E WB D35 G-TT PRO	4000 K	92	83 lm/W	390 lm
911401596345	RS378B P5 927 PSD-E MB D35 G-TT PRO	2700 K	92	59 lm/W	315 lm
911401596445	RS378B P5 930 PSD-E MB D35 G-TT PRO	3000 K	92	63 lm/W	335 lm
911401596545	RS378B P5 940 PSD-E MB D35 G-TT PRO	4000 K	92	67 lm/W	355 lm
911401596645	RS378B P5 927 PSD-E WB D35 G-TT PRO	2700 K	92	58 lm/W	310 lm
911401596745	RS378B P5 930 PSD-E WB D35 G-TT PRO	3000 K	92	62 lm/W	330 lm
911401596845	RS378B P5 940 PSD-E WB D35 G-TT PRO	4000 K	92	67 lm/W	355 lm
911401510146	RS378B P12 927 PSU-E NB M70 PRO	2700 K	92	123 lm/W	1,475 lm
911401510246	RS378B P12 930 PSU-E NB M70 PRO	3000 K	92	132 lm/W	1,585 lm
911401510346	RS378B P12 940 PSU-E NB M70 PRO	4000 K	92	131 lm/W	1,575 lm
911401510446	RS378B P12 927 PSU-E MB M70 PRO	2700 K	92	121 lm/W	1,455 lm
911401510546	RS378B P12 930 PSU-E MB M70 PRO	3000 K	92	135 lm/W	1,625 lm
911401510646	RS378B P12 940 PSU-E MB M70 PRO	4000 K	92	138 lm/W	1,650 lm
911401510746	RS378B P12 927 PSU-E WB M70 PRO	2700 K	92	130 lm/W	1,560 lm
911401510846	RS378B P12 930 PSU-E WB M70 PRO	3000 K	92	138 lm/W	1,655 lm
911401510946	RS378B P12 940 PSU-E WB M70 PRO	4000 K	92	143 lm/W	1,710 lm
911401511046	RS378B P17 927 PSU-E NB M70 PRO	2700 K	92	120 lm/W	2,095 lm

Order Code	Full Product Name	Correlated Color Temperature (Nom)	Color rendering index (CRI)	Luminous Efficacy (rated) (Nom)	Luminous Flux
911401511146	RS378B P17 930 PSU-E NB M70 PRO	3000 K	92	128 lm/W	2,245 lm
911401511246	RS378B P17 940 PSU-E NB M70 PRO	4000 K	92	133 lm/W	2,330 lm
911401511346	RS378B P17 927 PSU-E MB M70 PRO	2700 K	92	118 lm/W	2,065 lm
911401511446	RS378B P17 930 PSU-E MB M70 PRO	3000 K	92	131 lm/W	2,295 lm
911401511546	RS378B P17 940 PSU-E MB M70 PRO	4000 K	92	135 lm/W	2,365 lm
911401511646	RS378B P17 927 PSU-E WB M70 PRO	2700 K	92	128 lm/W	2,240 lm
911401511746	RS378B P17 930 PSU-E WB M70 PRO	3000 K	92	136 lm/W	2,385 lm
911401511846	RS378B P17 940 PSU-E WB M70 PRO	4000 K	92	137 lm/W	2,390 lm
911401511946	RS378B P19 927 PSU-E NB M70 PRO	2700 K	92	116 lm/W	2,270 lm
911401512046	RS378B P19 930 PSU-E NB M70 PRO	3000 K	92	123 lm/W	2,390 lm
911401512146	RS378B P19 940 PSU-E NB M70 PRO	4000 K	92	129 lm/W	2,510 lm
911401512246	RS378B P19 927 PSU-E MB M70 PRO	2700 K	92	116 lm/W	2,265 lm
911401512346	RS378B P19 930 PSU-E MB M70 PRO	3000 K	92	128 lm/W	2,505 lm
911401512446	RS378B P19 940 PSU-E MB M70 PRO	4000 K	92	133 lm/W	2,585 lm
911401512546	RS378B P19 927 PSU-E WB M70 PRO	2700 K	92	125 lm/W	2,435 lm
911401512646	RS378B P19 930 PSU-E WB M70 PRO	3000 K	92	133 lm/W	2,585 lm
911401512746	RS378B P19 940 PSU-E WB M70 PRO	4000 K	92	134 lm/W	2,605 lm
911401513746	RS378B P12 927 PSD-E NB M70 PRO	2700 K	92	115 lm/W	1,475 lm
911401513846	RS378B P12 930 PSD-E NB M70 PRO	3000 K	92	124 lm/W	1,585 lm
911401513946	RS378B P12 940 PSD-E NB M70 PRO	4000 K	92	123 lm/W	1,575 lm
911401514046	RS378B P12 927 PSD-E MB M70 PRO	2700 K	92	114 lm/W	1,455 lm
911401514146	RS378B P12 930 PSD-E MB M70 PRO	3000 K	92	127 lm/W	1,625 lm
911401514246	RS378B P12 940 PSD-E MB M70 PRO	4000 K	92	129 lm/W	1,650 lm
911401514346	RS378B P12 927 PSD-E WB M70 PRO	2700 K	92	122 lm/W	1,560 lm
911401514446	RS378B P12 930 PSD-E WB M70 PRO	3000 K	92	129 lm/W	1,655 lm

Order Code	Full Product Name	Correlated Color Temperature (Nom)	Color rendering index (CRI)	Luminous Efficacy (rated) (Nom)	Luminous Flux
911401514546	RS378B P12 940 PSD-E WB M70 PRO	4000 K	92	134 lm/W	1,710 lm
911401514646	RS378B P18 927 PSD-E NB M70 PRO	2700 K	92	113 lm/W	2,095 lm
911401514746	RS378B P18 930 PSD-E NB M70 PRO	3000 K	92	121 lm/W	2,245 lm
911401514846	RS378B P18 940 PSD-E NB M70 PRO	4000 K	92	126 lm/W	2,330 lm
911401514946	RS378B P18 927 PSD-E MB M70 PRO	2700 K	92	112 lm/W	2,065 lm
911401515046	RS378B P18 930 PSD-E MB M70 PRO	3000 K	92	124 lm/W	2,295 lm
911401515146	RS378B P18 940 PSD-E MB M70 PRO	4000 K	92	128 lm/W	2,365 lm
911401515246	RS378B P18 927 PSD-E WB M70 PRO	2700 K	92	121 lm/W	2,240 lm
911401515346	RS378B P18 930 PSD-E WB M70 PRO	3000 K	92	129 lm/W	2,385 lm
911401515446	RS378B P18 940 PSD-E WB M70 PRO	4000 K	92	129 lm/W	2,390 lm
911401515546	RS378B P20 927 PSD-E NB M70 PRO	2700 K	92	111 lm/W	2,270 lm
911401515646	RS378B P20 930 PSD-E NB M70 PRO	3000 K	92	117 lm/W	2,390 lm
911401515746	RS378B P20 940 PSD-E NB M70 PRO	4000 K	92	122 lm/W	2,510 lm
911401515846	RS378B P20 927 PSD-E MB M70 PRO	2700 K	92	110 lm/W	2,265 lm
911401515946	RS378B P20 930 PSD-E MB M70 PRO	3000 K	92	122 lm/W	2,505 lm
911401516046	RS378B P20 940 PSD-E MB M70 PRO	4000 K	92	126 lm/W	2,585 lm
911401516146	RS378B P20 927 PSD-E WB M70 PRO	2700 K	92	119 lm/W	2,435 lm
911401516246	RS378B P20 930 PSD-E WB M70 PRO	3000 K	92	126 lm/W	2,585 lm
911401516346	RS378B P20 940 PSD-E WB M70 PRO	4000 K	92	127 lm/W	2,605 lm
911401517346	RS378X P12 930 WIA MB M70 PRO	3000 K	92	135 lm/W	1,625 lm
911401517446	RS378X P12 930 WIA WB M70 PRO	3000 K	92	138 lm/W	1,655 lm
911401517546	RS378X P19 930 WIA MB M70 PRO	3000 K	92	125 lm/W	2,505 lm
911401517646	RS378X P19 930 WIA WB M70 PRO	3000 K	92	129 lm/W	2,585 lm
911401517746	RS378X P18 930 WIA MB M70 PRO	3000 K	92	128 lm/W	2,295 lm
911401517846	RS378X P18 930 WIA WB M70 PRO	3000 K	92	133 lm/W	2,385 lm

Order Code	Full Product Name	Correlated Color Temperature (Nom)	Color rendering index (CRI)	Luminous Efficacy (rated) (Nom)	Luminous Flux
911401518146	RS378B P12 930 PSU-E MB M70 WP PRO	3000 K	92	135 lm/W	1,625 lm
911401518246	RS378B P12 930 PSU-E WB M70 WP PRO	3000 K	92	138 lm/W	1,655 lm
911401518346	RS378B P17 930 PSU-E MB M70 WP PRO	3000 K	92	131 lm/W	2,295 lm
911401518446	RS378B P17 930 PSU-E WB M70 WP PRO	3000 K	92	136 lm/W	2,385 lm
911401518546	RS378B P19 930 PSU-E MB M70 WP PRO	3000 K	92	128 lm/W	2,505 lm
911401518646	RS378B P19 930 PSU-E WB M70 WP PRO	3000 K	92	133 lm/W	2,585 lm
911401520446	RS378B P13 PSD-TNW NB M70 PRO	Tunable White	90	83 lm/W	1,120 lm
911401520546	RS378B P13 PSD-TNW MB M70 PRO	Tunable White	90	82 lm/W	1,110 lm
911401520646	RS378B P13 PSD-TNW WB M70 PRO	Tunable White	90	82 lm/W	1,110 lm
911401520746	RS378B P19 PSD-TNW NB M70 PRO	Tunable White	90	81 lm/W	1,620 lm
911401520846	RS378B P19 PSD-TNW MB M70 PRO	Tunable White	90	80 lm/W	1,600 lm
911401520946	RS378B P19 PSD-TNW WB M70 PRO	Tunable White	90	80 lm/W	1,600 lm
911401521046	RS378B P22 PSD-TNW NB M70 PRO	Tunable White	90	81 lm/W	1,780 lm
911401521146	RS378B P22 PSD-TNW MB M70 PRO	Tunable White	90	80 lm/W	1,760 lm
911401521246	RS378B P22 PSD-TNW WB M70 PRO	Tunable White	90	80 lm/W	1,760 lm
911401512846	RS378B P27 927 PSU-E NB M70 PRO	2700 K	92	106 lm/W	2,905 lm
911401512946	RS378B P27 930 PSU-E NB M70 PRO	3000 K	92	112 lm/W	3,090 lm
911401513046	RS378B P27 940 PSU-E NB M70 PRO	4000 K	92	116 lm/W	3,185 lm
911401513146	RS378B P27 927 PSU-E MB M70 PRO	2700 K	92	109 lm/W	2,995 lm
911401513246	RS378B P27 930 PSU-E MB M70 PRO	3000 K	92	116 lm/W	3,185 lm
911401513346	RS378B P27 940 PSU-E MB M70 PRO	4000 K	92	119 lm/W	3,280 lm
911401513446	RS378B P27 927 PSU-E WB M70 PRO	2700 K	92	112 lm/W	3,090 lm
911401513546	RS378B P27 930 PSU-E WB M70 PRO	3000 K	92	119 lm/W	3,285 lm
911401513646	RS378B P27 940 PSU-E WB M70 PRO	4000 K	92	123 lm/W	3,385 lm
911401516446	RS378B P27 927 PSD-E NB M70 PRO	2700 K	92	102 lm/W	2,750 lm

Order Code	Full Product Name	Correlated Color Temperature (Nom)	Color rendering index (CRI)	Luminous Efficacy (rated) (Nom)	Luminous Flux
911401516546	RS378B P27 930 PSD-E NB M70 PRO	3000 K	92	108 lm/W	2,925 lm
911401516646	RS378B P27 940 PSD-E NB M70 PRO	4000 K	92	112 lm/W	3,015 lm
911401516746	RS378B P27 927 PSD-E MB M70 PRO	2700 K	92	105 lm/W	2,835 lm
911401516846	RS378B P27 930 PSD-E MB M70 PRO	3000 K	92	112 lm/W	3,015 lm
911401516946	RS378B P27 940 PSD-E MB M70 PRO	4000 K	92	115 lm/W	3,105 lm
911401517046	RS378B P27 927 PSD-E WB M70 PRO	2700 K	92	108 lm/W	2,925 lm
911401517146	RS378B P27 930 PSD-E WB M70 PRO	3000 K	92	115 lm/W	3,110 lm
911401517246	RS378B P27 940 PSD-E WB M70 PRO	4000 K	92	119 lm/W	3,205 lm
911401517946	RS378X P28 930 WIA MB M70 PRO	3000 K	92	112 lm/W	3,185 lm
911401518046	RS378X P28 930 WIA WB M70 PRO	3000 K	92	115 lm/W	3,285 lm
911401518746	RS378B P27 930 PSU-E MB M70 WP PRO	3000 K	92	116 lm/W	3,185 lm
911401518846	RS378B P27 930 PSU-E WB M70 WP PRO	3000 K	92	119 lm/W	3,285 lm
911401521346	RS378B P29 PSD-TNW NB M70 PRO	Tunable White	90	80 lm/W	2,240 lm
911401521446	RS378B P29 PSD-TNW MB M70 PRO	Tunable White	90	79 lm/W	2,210 lm
911401521546	RS378B P29 PSD-TNW WB M70 PRO	Tunable White	90	79 lm/W	2,210 lm
911401530846	SM378B S P8 927 PSU-E NB D100 G-TT PRO	2700 K	92	122 lm/W	955 lm
911401530946	SM378B S P8 930 PSU-E NB D100 G-TT PRO	3000 K	92	130 lm/W	1,015 lm
911401531046	SM378B S P8 940 PSU-E NB D100 G-TT PRO	4000 K	92	134 lm/W	1,045 lm
911401531146	SM378B S P8 927 PSU-E MB D100 G-TT PRO	2700 K	92	115 lm/W	900 lm
911401531246	SM378B S P8 930 PSU-E MB D100 G-TT PRO	3000 K	92	124 lm/W	965 lm
911401531346	SM378B S P8 940 PSU-E MB D100 G-TT PRO	4000 K	92	127 lm/W	990 lm
911401531446	SM378B S P8 927 PSU-E WB D100 G-TT PRO	2700 K	92	112 lm/W	875 lm
911401531546	SM378B S P8 930 PSU-E WB D100 G-TT PRO	3000 K	92	119 lm/W	930 lm
911401531646	SM378B S P8 940 PSU-E WB D100 G-TT PRO	4000 K	92	122 lm/W	955 lm
911401531746	SM378B S P11 927 PSU-E NB D100 G-TT PRO	2700 K	92	121 lm/W	1,390 lm

Order Code	Full Product Name	Correlated Color Temperature (Nom)	Color rendering index (CRI)	Luminous Efficacy (rated) (Nom)	Luminous Flux
911401531846	SM378B S P11 930 PSU-E NB D100 G-TT PRO	3000 K	92	129 lm/W	1,480 lm
911401531946	SM378B S P11 940 PSU-E NB D100 G-TT PRO	4000 K	92	133 lm/W	1,525 lm
911401532046	SM378B S P11 927 PSU-E MB D100 G-TT PRO	2700 K	92	115 lm/W	1,325 lm
911401532146	SM378B S P11 930 PSU-E MB D100 G-TT PRO	3000 K	92	123 lm/W	1,415 lm
911401532246	SM378B S P11 940 PSU-E MB D100 G-TT PRO	4000 K	92	126 lm/W	1,450 lm
911401532346	SM378B S P11 927 PSU-E WB D100 G-TT PRO	2700 K	92	111 lm/W	1,280 lm
911401532446	SM378B S P11 930 PSU-E WB D100 G-TT PRO	3000 K	92	118 lm/W	1,360 lm
911401532546	SM378B S P11 940 PSU-E WB D100 G-TT PRO	4000 K	92	122 lm/W	1,400 lm
911401532646	SM378B S P13 927 PSU-E NB D100 G-TT PRO	2700 K	92	118 lm/W	1,590 lm
911401532746	SM378B S P13 930 PSU-E NB D100 G-TT PRO	3000 K	92	125 lm/W	1,690 lm
911401532846	SM378B S P13 940 PSU-E NB D100 G-TT PRO	4000 K	92	129 lm/W	1,740 lm
911401532946	SM378B S P13 927 PSU-E MB D100 G-TT PRO	2700 K	92	112 lm/W	1,510 lm
911401533046	SM378B S P13 930 PSU-E MB D100 G-TT PRO	3000 K	92	120 lm/W	1,615 lm
911401533146	SM378B S P13 940 PSU-E MB D100 G-TT PRO	4000 K	92	123 lm/W	1,655 lm
911401533246	SM378B S P13 927 PSU-E WB D100 G-TT PRO	2700 K	92	109 lm/W	1,470 lm
911401533346	SM378B S P13 930 PSU-E WB D100 G-TT PRO	3000 K	92	116 lm/W	1,565 lm
911401533446	SM378B S P13 940 PSU-E WB D100 G-TT PRO	4000 K	92	120 lm/W	1,615 lm
911401533546	SM378B S P20 927 PSU-E NB D100 G-TT PRO	2700 K	92	106 lm/W	2,115 lm
911401533646	SM378B S P20 930 PSU-E NB D100 G-TT PRO	3000 K	92	113 lm/W	2,250 lm
911401533746	SM378B S P20 940 PSU-E NB D100 G-TT PRO	4000 K	92	116 lm/W	2,315 lm
911401533846	SM378B S P20 927 PSU-E MB D100 G-TT PRO	2700 K	92	101 lm/W	2,015 lm
911401533946	SM378B S P20 930 PSU-E MB D100 G-TT PRO	3000 K	92	108 lm/W	2,150 lm
911401534046	SM378B S P20 940 PSU-E MB D100 G-TT PRO	4000 K	92	110 lm/W	2,205 lm
911401534146	SM378B S P20 927 PSU-E WB D100 G-TT PRO	2700 K	92	98 lm/W	1,955 lm
911401534246	SM378B S P20 930 PSU-E WB D100 G-TT PRO	3000 K	92	104 lm/W	2,080 lm

Order Code	Full Product Name	Correlated Color Temperature (Nom)	Color rendering index (CRI)	Luminous Efficacy (rated) (Nom)	Luminous Flux
911401534346	SM378B S P20 940 PSU-E WB D100 G-TT PRO	4000 K	92	108 lm/W	2,150 lm
911401534446	SM378B S P20 927 PSD-E NB D100 G-TT PRO	2700 K	92	103 lm/W	2,115 lm
911401534546	SM378B S P20 930 PSD-E NB D100 G-TT PRO	3000 K	92	110 lm/W	2,250 lm
911401534646	SM378B S P20 940 PSD-E NB D100 G-TT PRO	4000 K	92	113 lm/W	2,315 lm
911401534746	SM378B S P20 927 PSD-E MB D100 G-TT PRO	2700 K	92	98 lm/W	2,015 lm
911401534846	SM378B S P20 930 PSD-E MB D100 G-TT PRO	3000 K	92	105 lm/W	2,150 lm
911401534946	SM378B S P20 940 PSD-E MB D100 G-TT PRO	4000 K	92	108 lm/W	2,205 lm
911401535046	SM378B S P20 927 PSD-E WB D100 G-TT PRO	2700 K	92	95 lm/W	1,955 lm
911401535146	SM378B S P20 930 PSD-E WB D100 G-TT PRO	3000 K	92	101 lm/W	2,080 lm
911401535246	SM378B S P20 940 PSD-E WB D100 G-TT PRO	4000 K	92	105 lm/W	2,150 lm
911401535446	SM378B S P8 927 PSD-E NB D100 G-TT PRO	2700 K	92	106 lm/W	955 lm
911401535546	SM378B S P8 930 PSD-E NB D100 G-TT PRO	3000 K	92	113 lm/W	1,015 lm
911401535646	SM378B S P8 940 PSD-E NB D100 G-TT PRO	4000 K	92	116 lm/W	1,045 lm
911401535746	SM378B S P8 927 PSD-E MB D100 G-TT PRO	2700 K	92	100 lm/W	900 lm
911401535846	SM378B S P8 930 PSD-E MB D100 G-TT PRO	3000 K	92	107 lm/W	965 lm
911401535946	SM378B S P8 940 PSD-E MB D100 G-TT PRO	4000 K	92	110 lm/W	990 lm
911401536046	SM378B S P8 927 PSD-E WB D100 G-TT PRO	2700 K	92	97 lm/W	875 lm
911401536146	SM378B S P8 930 PSD-E WB D100 G-TT PRO	3000 K	92	103 lm/W	930 lm
911401536246	SM378B S P8 940 PSD-E WB D100 G-TT PRO	4000 K	92	106 lm/W	955 lm
911401536346	SM378B S P12 927 PSD-E NB D100 G-TT PRO	2700 K	92	107 lm/W	1,390 lm
911401536446	SM378B S P12 930 PSD-E NB D100 G-TT PRO	3000 K	92	114 lm/W	1,480 lm
911401536546	SM378B S P12 940 PSD-E NB D100 G-TT PRO	4000 K	92	117 lm/W	1,525 lm
911401536646	SM378B S P12 927 PSD-E MB D100 G-TT PRO	2700 K	92	102 lm/W	1,325 lm
911401536746	SM378B S P12 930 PSD-E MB D100 G-TT PRO	3000 K	92	109 lm/W	1,415 lm
911401536846	SM378B S P12 940 PSD-E MB D100 G-TT PRO	4000 K	92	112 lm/W	1,450 lm

Order Code	Full Product Name	Correlated Color Temperature (Nom)	Color rendering index (CRI)	Luminous Efficacy (rated) (Nom)	Luminous Flux
911401536946	SM378B S P12 927 PSD-E WB D100 G-TT PRO	2700 K	92	98 lm/W	1,280 lm
911401537046	SM378B S P12 930 PSD-E WB D100 G-TT PRO	3000 K	92	105 lm/W	1,360 lm
911401537146	SM378B S P12 940 PSD-E WB D100 G-TT PRO	4000 K	92	108 lm/W	1,400 lm
911401537246	SM378B S P14 927 PSD-E NB D100 G-TT PRO	2700 K	92	110 lm/W	1,590 lm
911401537346	SM378B S P14 930 PSD-E NB D100 G-TT PRO	3000 K	92	117 lm/W	1,690 lm
911401537446	SM378B S P14 940 PSD-E NB D100 G-TT PRO	4000 K	92	120 lm/W	1,740 lm
911401537546	SM378B S P14 927 PSD-E MB D100 G-TT PRO	2700 K	92	104 lm/W	1,510 lm
911401537646	SM378B S P14 930 PSD-E MB D100 G-TT PRO	3000 K	92	111 lm/W	1,615 lm
911401537746	SM378B S P14 940 PSD-E MB D100 G-TT PRO	4000 K	92	114 lm/W	1,655 lm
911401537846	SM378B S P14 927 PSD-E WB D100 G-TT PRO	2700 K	92	101 lm/W	1,470 lm
911401537946	SM378B S P14 930 PSD-E WB D100 G-TT PRO	3000 K	92	108 lm/W	1,565 lm
911401538046	SM378B S P14 940 PSD-E WB D100 G-TT PRO	4000 K	92	111 lm/W	1,615 lm
911401538146	SM378X S P8 930 WIA MB D100 G-TT PRO	3000 K	92	118 lm/W	965 lm
911401538246	SM378X S P8 930 WIA WB D100 G-TT PRO	3000 K	92	113 lm/W	930 lm
911401538346	SM378X S P12 930 WIA MB D100 G-TT PRO	3000 K	92	118 lm/W	1,415 lm
911401538446	SM378X S P12 930 WIA WB D100 G-TT PRO	3000 K	92	113 lm/W	1,360 lm
911401538546	SM378X S P14 930 WIA MB D100 G-TT PRO	3000 K	92	115 lm/W	1,615 lm
911401538646	SM378X S P14 930 WIA WB D100 G-TT PRO	3000 K	92	112 lm/W	1,565 lm
911401538746	SM378X S P20 930 WIA MB D100 G-TT PRO	3000 K	92	108 lm/W	2,150 lm
911401538846	SM378X S P20 930 WIA WB D100 G-TT PRO	3000 K	92	104 lm/W	2,080 lm
911401538946	SM378B S P9 PSD-TNW NB D100 G-TT PRO	Tunable White	90	86 lm/W	770 lm
911401539046	SM378B S P9 PSD-TNW MB D100 G-TT PRO	Tunable White	90	86 lm/W	770 lm
911401539146	SM378B S P9 PSD-TNW WB D100 G-TT PRO	Tunable White	90	83 lm/W	750 lm
911401539246	SM378B S P12 PSD-TNW NB D100 G-TT PRO	Tunable White	90	85 lm/W	1,110 lm
911401539346	SM378B S P12 PSD-TNW MB D100 G-TT PRO	Tunable White	90	84 lm/W	1,090 lm

Order Code	Full Product Name	Correlated Color Temperature (Nom)	Color rendering index (CRI)	Luminous Efficacy (rated) (Nom)	Luminous Flux
911401539446	SM378B S P12 PSD-TNW WB D100 G-TT PRO	Tunable White	90	82 lm/W	1,070 lm
911401539546	SM378B S P15 PSD-TNW NB D100 G-TT PRO	Tunable White	90	85 lm/W	1,320 lm
911401539646	SM378B S P15 PSD-TNW MB D100 G-TT PRO	Tunable White	90	84 lm/W	1,300 lm
911401539746	SM378B S P15 PSD-TNW WB D100 G-TT PRO	Tunable White	90	82 lm/W	1,270 lm
911401539846	SM378B S P22 PSD-TNW NB D100 G-TT PRO	Tunable White	90	82 lm/W	1,800 lm
911401539946	SM378B S P22 PSD-TNW MB D100 G-TT PRO	Tunable White	90	81 lm/W	1,780 lm
911401540046	SM378B S P22 PSD-TNW WB D100 G-TT PRO	Tunable White	90	79 lm/W	1,740 lm
911401503046	RS378B P12 927 PSU-E NB M55 PRO	2700 K	92	101 lm/W	1,270 lm
911401503146	RS378B P12 930 PSU-E NB M55 PRO	3000 K	92	106 lm/W	1,330 lm
911401503246	RS378B P12 940 PSU-E NB M55 PRO	4000 K	92	110 lm/W	1,390 lm
911401503346	RS378B P12 927 PSU-E MB M55 PRO	2700 K	92	105 lm/W	1,325 lm
911401503446	RS378B P12 930 PSU-E MB M55 PRO	3000 K	92	110 lm/W	1,390 lm
911401503546	RS378B P12 940 PSU-E MB M55 PRO	4000 K	92	116 lm/W	1,460 lm
911401503646	RS378B P12 927 PSU-E WB M55 PRO	2700 K	92	107 lm/W	1,350 lm
911401503746	RS378B P12 930 PSU-E WB M55 PRO	3000 K	92	115 lm/W	1,450 lm
911401503846	RS378B P12 940 PSU-E WB M55 PRO	4000 K	92	118 lm/W	1,490 lm
911401503946	RS378B P14 927 PSU-E NB M55 PRO	2700 K	92	96 lm/W	1,390 lm
911401504046	RS378B P14 930 PSU-E NB M55 PRO	3000 K	92	102 lm/W	1,480 lm
911401504146	RS378B P14 940 PSU-E NB M55 PRO	4000 K	92	105 lm/W	1,525 lm
911401504246	RS378B P14 927 PSU-E MB M55 PRO	2700 K	92	103 lm/W	1,490 lm
911401504346	RS378B P14 930 PSU-E MB M55 PRO	3000 K	92	109 lm/W	1,585 lm
911401504446	RS378B P14 940 PSU-E MB M55 PRO	4000 K	92	113 lm/W	1,635 lm
911401504546	RS378B P14 927 PSU-E WB M55 PRO	2700 K	92	104 lm/W	1,505 lm
911401504646	RS378B P14 930 PSU-E WB M55 PRO	3000 K	92	110 lm/W	1,600 lm
911401504746	RS378B P14 940 PSU-E WB M55 PRO	4000 K	92	114 lm/W	1,650 lm

Order Code	Full Product Name	Correlated Color Temperature (Nom)	Color rendering index (CRI)	Luminous Efficacy (rated) (Nom)	Luminous Flux
911401506946	RS378B P13 927 PSD-E NB M55 PRO	2700 K	92	94 lm/W	1,270 lm
911401507046	RS378B P13 930 PSD-E NB M55 PRO	3000 K	92	99 lm/W	1,330 lm
911401507146	RS378B P13 940 PSD-E NB M55 PRO	4000 K	92	103 lm/W	1,390 lm
911401507246	RS378B P13 927 PSD-E MB M55 PRO	2700 K	92	98 lm/W	1,325 lm
911401507346	RS378B P13 930 PSD-E MB M55 PRO	3000 K	92	103 lm/W	1,390 lm
911401507446	RS378B P13 940 PSD-E MB M55 PRO	4000 K	92	108 lm/W	1,460 lm
911401507546	RS378B P13 927 PSD-E WB M55 PRO	2700 K	92	100 lm/W	1,350 lm
911401507646	RS378B P13 930 PSD-E WB M55 PRO	3000 K	92	107 lm/W	1,450 lm
911401507746	RS378B P13 940 PSD-E WB M55 PRO	4000 K	92	110 lm/W	1,490 lm
911401507846	RS378B P15 927 PSD-E NB M55 PRO	2700 K	92	90 lm/W	1,390 lm
911401507946	RS378B P15 930 PSD-E NB M55 PRO	3000 K	92	95 lm/W	1,480 lm
911401508046	RS378B P15 940 PSD-E NB M55 PRO	4000 K	92	98 lm/W	1,525 lm
911401508146	RS378B P15 927 PSD-E MB M55 PRO	2700 K	92	96 lm/W	1,490 lm
911401508246	RS378B P15 930 PSD-E MB M55 PRO	3000 K	92	102 lm/W	1,585 lm
911401508346	RS378B P15 940 PSD-E MB M55 PRO	4000 K	92	105 lm/W	1,635 lm
911401508446	RS378B P15 927 PSD-E WB M55 PRO	2700 K	92	97 lm/W	1,505 lm
911401508546	RS378B P15 930 PSD-E WB M55 PRO	3000 K	92	103 lm/W	1,600 lm
911401508646	RS378B P15 940 PSD-E WB M55 PRO	4000 K	92	106 lm/W	1,650 lm
911401508946	RS378X P12 930 WIA MB M55 PRO	3000 K	92	109 lm/W	1,390 lm
911401509046	RS378X P12 930 WIA WB M55 PRO	3000 K	92	113 lm/W	1,450 lm
911401509146	RS378X P14 930 WIA MB M55 PRO	3000 K	92	106 lm/W	1,585 lm
911401509246	RS378X P14 930 WIA WB M55 PRO	3000 K	92	107 lm/W	1,600 lm
911401509746	RS378B P12 930 PSU-E MB M55 WP PRO	3000 K	92	110 lm/W	1,390 lm
911401509846	RS378B P12 930 PSU-E WB M55 WP PRO	3000 K	92	115 lm/W	1,450 lm
911401509946	RS378B P14 930 PSU-E MB M55 WP PRO	3000 K	92	109 lm/W	1,585 lm

Order Code	Full Product Name	Correlated Color Temperature (Nom)	Color rendering index (CRI)	Luminous Efficacy (rated) (Nom)	Luminous Flux
911401510046	RS378B P14 930 PSU-E WB M55 WP PRO	3000 K	92	110 lm/W	1,600 lm
911401519546	RS378B P13 PSD-TNW NB M55 PRO	Tunable White	90	71 lm/W	960 lm
911401519646	RS378B P13 PSD-TNW MB M55 PRO	Tunable White	90	73 lm/W	990 lm
911401519746	RS378B P13 PSD-TNW WB M55 PRO	Tunable White	90	76 lm/W	1,030 lm
911401519846	RS378B P15 PSD-TNW NB M55 PRO	Tunable White	90	71 lm/W	1,070 lm
911401519946	RS378B P15 PSD-TNW MB M55 PRO	Tunable White	90	73 lm/W	1,100 lm
911401520046	RS378B P15 PSD-TNW WB M55 PRO	Tunable White	90	76 lm/W	1,140 lm

Operating and Electrical

Order Code	Full Product Name	Power Consumption
911401521646	SM378B R P8 927 PSU-E NB D100 G-TT PRO	7.8 W
911401521746	SM378B R P8 930 PSU-E NB D100 G-TT PRO	7.8 W
911401521846	SM378B R P8 940 PSU-E NB D100 G-TT PRO	7.8 W
911401521946	SM378B R P8 927 PSU-E MB D100 G-TT PRO	7.8 W
911401522046	SM378B R P8 930 PSU-E MB D100 G-TT PRO	7.8 W
911401522146	SM378B R P8 940 PSU-E MB D100 G-TT PRO	7.8 W
911401522246	SM378B R P8 927 PSU-E WB D100 G-TT PRO	7.8 W
911401522346	SM378B R P8 930 PSU-E WB D100 G-TT PRO	7.8 W
911401522446	SM378B R P8 940 PSU-E WB D100 G-TT PRO	7.8 W
911401522546	SM378B R P11 927 PSU-E NB D100 G-TT PRO	11.5 W
911401522646	SM378B R P11 930 PSU-E NB D100 G-TT PRO	11.5 W
911401522746	SM378B R P11 940 PSU-E NB D100 G-TT PRO	11.5 W
911401522846	SM378B R P11 927 PSU-E MB D100 G-TT PRO	11.5 W
911401522946	SM378B R P11 930 PSU-E MB D100 G-TT PRO	11.5 W
911401523046	SM378B R P11 940 PSU-E MB D100 G-TT PRO	11.5 W
911401523146	SM378B R P11 927 PSU-E WB D100 G-TT PRO	11.5 W
911401523246	SM378B R P11 930 PSU-E WB D100 G-TT PRO	11.5 W
911401523346	SM378B R P11 940 PSU-E WB D100 G-TT PRO	11.5 W
911401523446	SM378B R P13 927 PSU-E NB D100 G-TT PRO	13.5 W
911401523546	SM378B R P13 930 PSU-E NB D100 G-TT PRO	13.5 W
911401523646	SM378B R P13 940 PSU-E NB D100 G-TT PRO	13.5 W
911401523746	SM378B R P13 927 PSU-E MB D100 G-TT PRO	13.5 W
911401523846	SM378B R P13 930 PSU-E MB D100 G-TT PRO	13.5 W
911401523946	SM378B R P13 940 PSU-E MB D100 G-TT PRO	13.5 W
911401524046	SM378B R P13 927 PSU-E WB D100 G-TT PRO	13.5 W
911401524146	SM378B R P13 930 PSU-E WB D100 G-TT PRO	13.5 W
911401524246	SM378B R P13 940 PSU-E WB D100 G-TT PRO	13.5 W
911401524346	SM378B R P20 927 PSU-E NB D100 G-TT PRO	20 W
911401524446	SM378B R P20 930 PSU-E NB D100 G-TT PRO	20 W
911401524546	SM378B R P20 940 PSU-E NB D100 G-TT PRO	20 W
911401524646	SM378B R P20 927 PSU-E MB D100 G-TT PRO	20 W
911401524746	SM378B R P20 930 PSU-E MB D100 G-TT PRO	20 W

Order Code	Full Product Name	Power Consumption
911401524846	SM378B R P20 940 PSU-E MB D100 G-TT PRO	20 W
911401524946	SM378B R P20 927 PSU-E WB D100 G-TT PRO	20 W
911401525046	SM378B R P20 930 PSU-E WB D100 G-TT PRO	20 W
911401525146	SM378B R P20 940 PSU-E WB D100 G-TT PRO	20 W
911401525246	SM378B R P20 927 PSD-E NB D100 G-TT PRO	20.5 W
911401525346	SM378B R P20 930 PSD-E NB D100 G-TT PRO	20.5 W
911401525446	SM378B R P20 940 PSD-E NB D100 G-TT PRO	20.5 W
911401525546	SM378B R P20 927 PSD-E MB D100 G-TT PRO	20.5 W
911401525646	SM378B R P20 930 PSD-E MB D100 G-TT PRO	20.5 W
911401525746	SM378B R P20 940 PSD-E MB D100 G-TT PRO	20.5 W
911401525846	SM378B R P20 927 PSD-E WB D100 G-TT PRO	20.5 W
911401525946	SM378B R P20 930 PSD-E WB D100 G-TT PRO	20.5 W
911401526046	SM378B R P20 940 PSD-E WB D100 G-TT PRO	20.5 W
911401526146	SM378B R P8 927 PSD-E NB D100 G-TT PRO	9 W
911401526246	SM378B R P8 930 PSD-E NB D100 G-TT PRO	9 W
911401526346	SM378B R P8 940 PSD-E NB D100 G-TT PRO	9 W
911401526446	SM378B R P8 927 PSD-E MB D100 G-TT PRO	9 W
911401526546	SM378B R P8 930 PSD-E MB D100 G-TT PRO	9 W
911401526646	SM378B R P8 940 PSD-E MB D100 G-TT PRO	9 W
911401526746	SM378B R P8 927 PSD-E WB D100 G-TT PRO	9 W
911401526846	SM378B R P8 930 PSD-E WB D100 G-TT PRO	9 W
911401526946	SM378B R P8 940 PSD-E WB D100 G-TT PRO	9 W
911401527046	SM378B R P12 927 PSD-E NB D100 G-TT PRO	13 W
911401527146	SM378B R P12 930 PSD-E NB D100 G-TT PRO	13 W
911401527246	SM378B R P12 940 PSD-E NB D100 G-TT PRO	13 W
911401527346	SM378B R P12 927 PSD-E MB D100 G-TT PRO	13 W
911401527446	SM378B R P12 930 PSD-E MB D100 G-TT PRO	13 W
911401527546	SM378B R P12 940 PSD-E MB D100 G-TT PRO	13 W
911401527646	SM378B R P12 927 PSD-E WB D100 G-TT PRO	13 W
911401527746	SM378B R P12 930 PSD-E WB D100 G-TT PRO	13 W
911401527846	SM378B R P12 940 PSD-E WB D100 G-TT PRO	13 W
911401527946	SM378B R P14 927 PSD-E NB D100 G-TT PRO	14.5 W

Order Code	Full Product Name	Power Consumption
911401528046	SM378B R P14 930 PSD-E NB D100 G-TT PRO	14.5 W
911401528146	SM378B R P14 940 PSD-E NB D100 G-TT PRO	14.5 W
911401528246	SM378B R P14 927 PSD-E MB D100 G-TT PRO	14.5 W
911401528346	SM378B R P14 930 PSD-E MB D100 G-TT PRO	14.5 W
911401528446	SM378B R P14 940 PSD-E MB D100 G-TT PRO	14.5 W
911401528546	SM378B R P14 927 PSD-E WB D100 G-TT PRO	14.5 W
911401528646	SM378B R P14 930 PSD-E WB D100 G-TT PRO	14.5 W
911401528746	SM378B R P14 940 PSD-E WB D100 G-TT PRO	14.5 W
911401528846	SM378X R P8 930 WIA MB D100 G-TT PRO	8.2 W
911401528946	SM378X R P8 930 WIA WB D100 G-TT PRO	8.2 W
911401529046	SM378X R P12 930 WIA MB D100 G-TT PRO	12 W
911401529146	SM378X R P12 930 WIA WB D100 G-TT PRO	12 W
911401529246	SM378X R P14 930 WIA MB D100 G-TT PRO	14 W
911401529346	SM378X R P14 930 WIA WB D100 G-TT PRO	14 W
911401529446	SM378X R P20 930 WIA MB D100 G-TT PRO	20 W
911401529546	SM378X R P20 930 WIA WB D100 G-TT PRO	20 W
911401529646	SM378B R P9 PSD-TNW NB D100 G-TT PRO	9 W
911401529746	SM378B R P9 PSD-TNW MB D100 G-TT PRO	9 W
911401529846	SM378B R P9 PSD-TNW WB D100 G-TT PRO	9 W
911401529946	SM378B R P12 PSD-TNW NB D100 G-TT PRO	13 W
911401530046	SM378B R P12 PSD-TNW MB D100 G-TT PRO	13 W
911401530146	SM378B R P12 PSD-TNW WB D100 G-TT PRO	13 W
911401530246	SM378B R P15 PSD-TNW NB D100 G-TT PRO	15.5 W
911401530346	SM378B R P15 PSD-TNW MB D100 G-TT PRO	15.5 W
911401530446	SM378B R P15 PSD-TNW WB D100 G-TT PRO	15.5 W
911401530546	SM378B R P22 PSD-TNW NB D100 G-TT PRO	22 W
911401530646	SM378B R P22 PSD-TNW MB D100 G-TT PRO	22 W
911401530746	SM378B R P22 PSD-TNW WB D100 G-TT PRO	22 W
911401500046	RS378B P7 930 PSD-E WB M43 PRO	7.4 W
911401500146	RS378B P7 940 PSD-E WB M43 PRO	7.4 W
911401500246	RS378B P6 930 PSU-E MB M43 WP PRO	5.9 W
911401500346	RS378B P6 930 PSU-E WB M43 WP PRO	5.9 W
911401500446	RS378B P8 930 PSU-E MB M43 WP PRO	8 W
911401500546	RS378B P8 930 PSU-E WB M43 WP PRO	8 W
911401520146	RS378B P7 PSD-TNW NB M43 PRO	7.5 W
911401520246	RS378B P7 PSD-TNW MB M43 PRO	7.5 W
911401520346	RS378B P7 PSD-TNW WB M43 PRO	7.5 W
911401596945	RS378B P6 927 PSU-E SNB M43 PRO	6.5 W
911401597045	RS378B P6 930 PSU-E SNB M43 PRO	6.5 W
911401597145	RS378B P6 940 PSU-E SNB M43 PRO	6.5 W
911401597245	RS378B P6 927 PSU-E NB M43 PRO	5.9 W
911401597345	RS378B P6 930 PSU-E NB M43 PRO	5.9 W
911401597445	RS378B P6 940 PSU-E NB M43 PRO	5.9 W
911401597545	RS378B P6 927 PSU-E MB M43 PRO	5.9 W
911401597645	RS378B P6 930 PSU-E MB M43 PRO	5.9 W
911401597745	RS378B P6 940 PSU-E MB M43 PRO	5.9 W
911401597845	RS378B P6 927 PSU-E WB M43 PRO	5.9 W
911401597945	RS378B P6 930 PSU-E WB M43 PRO	5.9 W
911401598045	RS378B P6 940 PSU-E WB M43 PRO	5.9 W
911401598145	RS378B P8 927 PSU-E NB M43 PRO	8 W
911401598245	RS378B P8 930 PSU-E NB M43 PRO	8 W
911401598345	RS378B P8 940 PSU-E NB M43 PRO	8 W

Order Code	Full Product Name	Power Consumption
911401598445	RS378B P8 927 PSU-E MB M43 PRO	8 W
911401598545	RS378B P8 930 PSU-E MB M43 PRO	8 W
911401598645	RS378B P8 940 PSU-E MB M43 PRO	8 W
911401598745	RS378B P8 927 PSU-E WB M43 PRO	8 W
911401598845	RS378B P8 930 PSU-E WB M43 PRO	8 W
911401598945	RS378B P8 940 PSU-E WB M43 PRO	8 W
911401599045	RS378B P7 927 PSD-E SNB M43 PRO	7.5 W
911401599145	RS378B P7 930 PSD-E SNB M43 PRO	7.5 W
911401599245	RS378B P7 940 PSD-E SNB M43 PRO	7.5 W
911401599345	RS378B P7 927 PSD-E NB M43 PRO	7.4 W
911401599445	RS378B P7 930 PSD-E NB M43 PRO	7.4 W
911401599545	RS378B P7 940 PSD-E NB M43 PRO	7.4 W
911401599645	RS378B P7 927 PSD-E MB M43 PRO	7.4 W
911401599745	RS378B P7 930 PSD-E MB M43 PRO	7.4 W
911401599845	RS378B P7 940 PSD-E MB M43 PRO	7.4 W
911401599945	RS378B P7 927 PSD-E WB M43 PRO	7.4 W
911401500646	RS378B P7 927 PSU-E SNB M55 PRO	7.2 W
911401500746	RS378B P7 930 PSU-E SNB M55 PRO	7.2 W
911401500846	RS378B P7 940 PSU-E SNB M55 PRO	7.2 W
911401500946	RS378B P7 927 PSU-E NB M55 PRO	7.1 W
911401501046	RS378B P7 930 PSU-E NB M55 PRO	7.1 W
911401501146	RS378B P7 940 PSU-E NB M55 PRO	7.1 W
911401501246	RS378B P7 927 PSU-E MB M55 PRO	7.1 W
911401501346	RS378B P7 930 PSU-E MB M55 PRO	7.1 W
911401501446	RS378B P7 940 PSU-E MB M55 PRO	7.1 W
911401501546	RS378B P7 927 PSU-E WB M55 PRO	7.1 W
911401501646	RS378B P7 930 PSU-E WB M55 PRO	7.1 W
911401501746	RS378B P7 940 PSU-E WB M55 PRO	7.1 W
911401501846	RS378B P8 927 PSU-E SNB M55 PRO	8 W
911401501946	RS378B P8 930 PSU-E SNB M55 PRO	8 W
911401502046	RS378B P8 940 PSU-E SNB M55 PRO	8 W
911401502146	RS378B P9 927 PSU-E NB M55 PRO	9 W
911401502246	RS378B P9 930 PSU-E NB M55 PRO	9 W
911401502346	RS378B P9 940 PSU-E NB M55 PRO	9 W
911401502446	RS378B P9 927 PSU-E MB M55 PRO	9 W
911401502546	RS378B P9 930 PSU-E MB M55 PRO	9 W
911401502646	RS378B P9 940 PSU-E MB M55 PRO	9 W
911401502746	RS378B P9 927 PSU-E WB M55 PRO	9 W
911401502846	RS378B P9 930 PSU-E WB M55 PRO	9 W
911401502946	RS378B P9 940 PSU-E WB M55 PRO	9 W
911401504846	RS378B P7 927 PSD-E SNB M55 PRO	7.5 W
911401504946	RS378B P7 930 PSD-E SNB M55 PRO	7.5 W
911401505046	RS378B P7 940 PSD-E SNB M55 PRO	7.5 W
911401505146	RS378B P7 927 PSD-E NB M55 PRO	7.3 W
911401505246	RS378B P7 930 PSD-E NB M55 PRO	7.3 W
911401505346	RS378B P7 940 PSD-E NB M55 PRO	7.3 W
911401505446	RS378B P7 927 PSD-E MB M55 PRO	7.3 W
911401505546	RS378B P7 930 PSD-E MB M55 PRO	7.3 W
911401505646	RS378B P7 940 PSD-E MB M55 PRO	7.3 W
911401505746	RS378B P7 927 PSD-E WB M55 PRO	7.3 W
911401505846	RS378B P7 930 PSD-E WB M55 PRO	7.3 W
911401505946	RS378B P7 940 PSD-E WB M55 PRO	7.3 W

GreenSpace Flex Luna

Order Code	Full Product Name	Power Consumption
911401506046	RS378B P9 927 PSD-E NB M55 PRO	9.5 W
911401506146	RS378B P9 930 PSD-E NB M55 PRO	9.5 W
911401506246	RS378B P9 940 PSD-E NB M55 PRO	9.5 W
911401506346	RS378B P9 927 PSD-E MB M55 PRO	9.5 W
911401506446	RS378B P9 930 PSD-E MB M55 PRO	9.5 W
911401506546	RS378B P9 940 PSD-E MB M55 PRO	9.5 W
911401506646	RS378B P9 927 PSD-E WB M55 PRO	9.5 W
911401506746	RS378B P9 930 PSD-E WB M55 PRO	9.5 W
911401506846	RS378B P9 940 PSD-E WB M55 PRO	9.5 W
911401508746	RS378X P9 930 WIA MB M55 PRO	8.7 W
911401508846	RS378X P9 930 WIA WB M55 PRO	8.7 W
911401509346	RS378B P7 930 PSU-E MB M55 WP PRO	7.1 W
911401509446	RS378B P7 930 PSU-E WB M55 WP PRO	7.1 W
911401509546	RS378B P9 930 PSU-E MB M55 WP PRO	9 W
911401509646	RS378B P9 930 PSU-E WB M55 WP PRO	9 W
911401518946	RS378B P7 PSD-TNW NB M55 PRO	7.1 W
911401519046	RS378B P7 PSD-TNW MB M55 PRO	7.1 W
911401519146	RS378B P7 PSD-TNW WB M55 PRO	7.1 W
911401519246	RS378B P9 PSD-TNW NB M55 PRO	9 W
911401519346	RS378B P9 PSD-TNW MB M55 PRO	9 W
911401519446	RS378B P9 PSD-TNW WB M55 PRO	9 W
911401595145	RS378B P3 927 PSU-E MB D35 G-TT PRO	3.1 W
911401595245	RS378B P3 930 PSU-E MB D35 G-TT PRO	3.1 W
911401595345	RS378B P3 940 PSU-E MB D35 G-TT PRO	3.1 W
911401595445	RS378B P3 927 PSU-E WB D35 G-TT PRO	3.1 W
911401595545	RS378B P3 930 PSU-E WB D35 G-TT PRO	3.1 W
911401595645	RS378B P3 940 PSU-E WB D35 G-TT PRO	3.1 W
911401595745	RS378B P5 927 PSU-E MB D35 G-TT PRO	4.7 W
911401595845	RS378B P5 930 PSU-E MB D35 G-TT PRO	4.7 W
911401595945	RS378B P5 940 PSU-E MB D35 G-TT PRO	4.7 W
911401596045	RS378B P5 927 PSU-E WB D35 G-TT PRO	4.7 W
911401596145	RS378B P5 930 PSU-E WB D35 G-TT PRO	4.7 W
911401596245	RS378B P5 940 PSU-E WB D35 G-TT PRO	4.7 W
911401596345	RS378B P5 927 PSD-E MB D35 G-TT PRO	5.9 W
911401596445	RS378B P5 930 PSD-E MB D35 G-TT PRO	5.3 W
911401596545	RS378B P5 940 PSD-E MB D35 G-TT PRO	5.3 W
911401596645	RS378B P5 927 PSD-E WB D35 G-TT PRO	5.3 W
911401596745	RS378B P5 930 PSD-E WB D35 G-TT PRO	5.3 W
911401596845	RS378B P5 940 PSD-E WB D35 G-TT PRO	5.3 W
911401510146	RS378B P12 927 PSU-E NB M70 PRO	12 W
911401510246	RS378B P12 930 PSU-E NB M70 PRO	12 W
911401510346	RS378B P12 940 PSU-E NB M70 PRO	12 W
911401510446	RS378B P12 927 PSU-E MB M70 PRO	12 W
911401510546	RS378B P12 930 PSU-E MB M70 PRO	12 W
911401510646	RS378B P12 940 PSU-E MB M70 PRO	12 W
911401510746	RS378B P12 927 PSU-E WB M70 PRO	12 W
911401510846	RS378B P12 930 PSU-E WB M70 PRO	12 W
911401510946	RS378B P12 940 PSU-E WB M70 PRO	12 W
911401511046	RS378B P17 927 PSU-E NB M70 PRO	17.5 W
911401511146	RS378B P17 930 PSU-E NB M70 PRO	17.5 W
911401511246	RS378B P17 940 PSU-E NB M70 PRO	17.5 W
911401511346	RS378B P17 927 PSU-E MB M70 PRO	17.5 W

Order Code	Full Product Name	Power Consumption
911401511446	RS378B P17 930 PSU-E MB M70 PRO	17.5 W
911401511546	RS378B P17 940 PSU-E MB M70 PRO	17.5 W
911401511646	RS378B P17 927 PSU-E WB M70 PRO	17.5 W
911401511746	RS378B P17 930 PSU-E WB M70 PRO	17.5 W
911401511846	RS378B P17 940 PSU-E WB M70 PRO	17.5 W
911401511946	RS378B P19 927 PSU-E NB M70 PRO	19.5 W
911401512046	RS378B P19 930 PSU-E NB M70 PRO	19.5 W
911401512146	RS378B P19 940 PSU-E NB M70 PRO	19.5 W
911401512246	RS378B P19 927 PSU-E MB M70 PRO	19.5 W
911401512346	RS378B P19 930 PSU-E MB M70 PRO	19.5 W
911401512446	RS378B P19 940 PSU-E MB M70 PRO	19.5 W
911401512546	RS378B P19 927 PSU-E WB M70 PRO	19.5 W
911401512646	RS378B P19 930 PSU-E WB M70 PRO	19.5 W
911401512746	RS378B P19 940 PSU-E WB M70 PRO	19.5 W
911401513746	RS378B P12 927 PSD-E NB M70 PRO	12.8 W
911401513846	RS378B P12 930 PSD-E NB M70 PRO	12.8 W
911401513946	RS378B P12 940 PSD-E NB M70 PRO	12.8 W
911401514046	RS378B P12 927 PSD-E MB M70 PRO	12.8 W
911401514146	RS378B P12 930 PSD-E MB M70 PRO	12.8 W
911401514246	RS378B P12 940 PSD-E MB M70 PRO	12.8 W
911401514346	RS378B P12 927 PSD-E WB M70 PRO	12.8 W
911401514446	RS378B P12 930 PSD-E WB M70 PRO	12.8 W
911401514546	RS378B P12 940 PSD-E WB M70 PRO	12.8 W
911401514646	RS378B P18 927 PSD-E NB M70 PRO	18.5 W
911401514746	RS378B P18 930 PSD-E NB M70 PRO	18.5 W
911401514846	RS378B P18 940 PSD-E NB M70 PRO	18.5 W
911401514946	RS378B P18 927 PSD-E MB M70 PRO	18.5 W
911401515046	RS378B P18 930 PSD-E MB M70 PRO	18.5 W
911401515146	RS378B P18 940 PSD-E MB M70 PRO	18.5 W
911401515246	RS378B P18 927 PSD-E WB M70 PRO	18.5 W
911401515346	RS378B P18 930 PSD-E WB M70 PRO	18.5 W
911401515446	RS378B P18 940 PSD-E WB M70 PRO	18.5 W
911401515546	RS378B P20 927 PSD-E NB M70 PRO	20.5 W
911401515646	RS378B P20 930 PSD-E NB M70 PRO	20.5 W
911401515746	RS378B P20 940 PSD-E NB M70 PRO	20.5 W
911401515846	RS378B P20 927 PSD-E MB M70 PRO	20.5 W
911401515946	RS378B P20 930 PSD-E MB M70 PRO	20.5 W
911401516046	RS378B P20 940 PSD-E MB M70 PRO	20.5 W
911401516146	RS378B P20 927 PSD-E WB M70 PRO	20.5 W
911401516246	RS378B P20 930 PSD-E WB M70 PRO	20.5 W
911401516346	RS378B P20 940 PSD-E WB M70 PRO	20.5 W
911401517346	RS378X P12 930 WIA MB M70 PRO	12 W
911401517446	RS378X P12 930 WIA WB M70 PRO	12 W
911401517546	RS378X P19 930 WIA MB M70 PRO	20 W
911401517646	RS378X P19 930 WIA WB M70 PRO	20 W
911401517746	RS378X P18 930 WIA MB M70 PRO	18 W
911401517846	RS378X P18 930 WIA WB M70 PRO	18 W
911401518146	RS378B P12 930 PSU-E MB M70 WP PRO	12 W
911401518246	RS378B P12 930 PSU-E WB M70 WP PRO	12 W
911401518346	RS378B P17 930 PSU-E MB M70 WP PRO	17.5 W
911401518446	RS378B P17 930 PSU-E WB M70 WP PRO	17.5 W
911401518546	RS378B P19 930 PSU-E MB M70 WP PRO	19.5 W

Order Code	Full Product Name	Power Consumption
911401518646	RS378B P19 930 PSU-E WB M70 WP PRO	19.5 W
911401520446	RS378B P13 PSD-TNW NB M70 PRO	13.5 W
911401520546	RS378B P13 PSD-TNW MB M70 PRO	13.5 W
911401520646	RS378B P13 PSD-TNW WB M70 PRO	13.5 W
911401520746	RS378B P19 PSD-TNW NB M70 PRO	20 W
911401520846	RS378B P19 PSD-TNW MB M70 PRO	20 W
911401520946	RS378B P19 PSD-TNW WB M70 PRO	20 W
911401521046	RS378B P22 PSD-TNW NB M70 PRO	22 W
911401521146	RS378B P22 PSD-TNW MB M70 PRO	22 W
911401521246	RS378B P22 PSD-TNW WB M70 PRO	22 W
911401512846	RS378B P27 927 PSU-E NB M70 PRO	27.5 W
911401512946	RS378B P27 930 PSU-E NB M70 PRO	27.5 W
911401513046	RS378B P27 940 PSU-E NB M70 PRO	27.5 W
911401513146	RS378B P27 927 PSU-E MB M70 PRO	27.5 W
911401513246	RS378B P27 930 PSU-E MB M70 PRO	27.5 W
911401513346	RS378B P27 940 PSU-E MB M70 PRO	27.5 W
911401513446	RS378B P27 927 PSU-E WB M70 PRO	27.5 W
911401513546	RS378B P27 930 PSU-E WB M70 PRO	27.5 W
911401513646	RS378B P27 940 PSU-E WB M70 PRO	27.5 W
911401516446	RS378B P27 927 PSD-E NB M70 PRO	27 W
911401516546	RS378B P27 930 PSD-E NB M70 PRO	27 W
911401516646	RS378B P27 940 PSD-E NB M70 PRO	27 W
911401516746	RS378B P27 927 PSD-E MB M70 PRO	27 W
911401516846	RS378B P27 930 PSD-E MB M70 PRO	27 W
911401516946	RS378B P27 940 PSD-E MB M70 PRO	27 W
911401517046	RS378B P27 927 PSD-E WB M70 PRO	27 W
911401517146	RS378B P27 930 PSD-E WB M70 PRO	27 W
911401517246	RS378B P27 940 PSD-E WB M70 PRO	27 W
911401517946	RS378X P28 930 WIA MB M70 PRO	28.5 W
911401518046	RS378X P28 930 WIA WB M70 PRO	28.5 W
911401518746	RS378B P27 930 PSU-E MB M70 WP PRO	27.5 W
911401518846	RS378B P27 930 PSU-E WB M70 WP PRO	27.5 W
911401521346	RS378B P29 PSD-TNW NB M70 PRO	28 W
911401521446	RS378B P29 PSD-TNW MB M70 PRO	28 W
911401521546	RS378B P29 PSD-TNW WB M70 PRO	28 W
911401530846	SM378B S P8 927 PSU-E NB D100 G-TT PRO	7.8 W
911401530946	SM378B S P8 930 PSU-E NB D100 G-TT PRO	7.8 W
911401531046	SM378B S P8 940 PSU-E NB D100 G-TT PRO	7.8 W
911401531146	SM378B S P8 927 PSU-E MB D100 G-TT PRO	7.8 W
911401531246	SM378B S P8 930 PSU-E MB D100 G-TT PRO	7.8 W
911401531346	SM378B S P8 940 PSU-E MB D100 G-TT PRO	7.8 W
911401531446	SM378B S P8 927 PSU-E WB D100 G-TT PRO	7.8 W
911401531546	SM378B S P8 930 PSU-E WB D100 G-TT PRO	7.8 W
911401531646	SM378B S P8 940 PSU-E WB D100 G-TT PRO	7.8 W
911401531746	SM378B S P11 927 PSU-E NB D100 G-TT PRO	11.5 W
911401531846	SM378B S P11 930 PSU-E NB D100 G-TT PRO	11.5 W
911401531946	SM378B S P11 940 PSU-E NB D100 G-TT PRO	11.5 W
911401532046	SM378B S P11 927 PSU-E MB D100 G-TT PRO	11.5 W
911401532146	SM378B S P11 930 PSU-E MB D100 G-TT PRO	11.5 W
911401532246	SM378B S P11 940 PSU-E MB D100 G-TT PRO	11.5 W
911401532346	SM378B S P11 927 PSU-E WB D100 G-TT PRO	11.5 W
911401532446	SM378B S P11 930 PSU-E WB D100 G-TT PRO	11.5 W

Order Code	Full Product Name	Power Consumption
911401532546	SM378B S P11 940 PSU-E WB D100 G-TT PRO	11.5 W
911401532646	SM378B S P13 927 PSU-E NB D100 G-TT PRO	13.5 W
911401532746	SM378B S P13 930 PSU-E NB D100 G-TT PRO	13.5 W
911401532846	SM378B S P13 940 PSU-E NB D100 G-TT PRO	13.5 W
911401532946	SM378B S P13 927 PSU-E MB D100 G-TT PRO	13.5 W
911401533046	SM378B S P13 930 PSU-E MB D100 G-TT PRO	13.5 W
911401533146	SM378B S P13 940 PSU-E MB D100 G-TT PRO	13.5 W
911401533246	SM378B S P13 927 PSU-E WB D100 G-TT PRO	13.5 W
911401533346	SM378B S P13 930 PSU-E WB D100 G-TT PRO	13.5 W
911401533446	SM378B S P13 940 PSU-E WB D100 G-TT PRO	13.5 W
911401533546	SM378B S P20 927 PSU-E NB D100 G-TT PRO	20 W
911401533646	SM378B S P20 930 PSU-E NB D100 G-TT PRO	20 W
911401533746	SM378B S P20 940 PSU-E NB D100 G-TT PRO	20 W
911401533846	SM378B S P20 927 PSU-E MB D100 G-TT PRO	20 W
911401533946	SM378B S P20 930 PSU-E MB D100 G-TT PRO	20 W
911401534046	SM378B S P20 940 PSU-E MB D100 G-TT PRO	20 W
911401534146	SM378B S P20 927 PSU-E WB D100 G-TT PRO	20 W
911401534246	SM378B S P20 930 PSU-E WB D100 G-TT PRO	20 W
911401534346	SM378B S P20 940 PSU-E WB D100 G-TT PRO	20 W
911401534446	SM378B S P20 927 PSD-E NB D100 G-TT PRO	20.5 W
911401534546	SM378B S P20 930 PSD-E NB D100 G-TT PRO	20.5 W
911401534646	SM378B S P20 940 PSD-E NB D100 G-TT PRO	20.5 W
911401534746	SM378B S P20 927 PSD-E MB D100 G-TT PRO	20.5 W
911401534846	SM378B S P20 930 PSD-E MB D100 G-TT PRO	20.5 W
911401534946	SM378B S P20 940 PSD-E MB D100 G-TT PRO	20.5 W
911401535046	SM378B S P20 927 PSD-E WB D100 G-TT PRO	20.5 W
911401535146	SM378B S P20 930 PSD-E WB D100 G-TT PRO	20.5 W
911401535246	SM378B S P20 940 PSD-E WB D100 G-TT PRO	20.5 W
911401535446	SM378B S P8 927 PSD-E NB D100 G-TT PRO	9 W
911401535546	SM378B S P8 930 PSD-E NB D100 G-TT PRO	9 W
911401535646	SM378B S P8 940 PSD-E NB D100 G-TT PRO	9 W
911401535746	SM378B S P8 927 PSD-E MB D100 G-TT PRO	9 W
911401535846	SM378B S P8 930 PSD-E MB D100 G-TT PRO	9 W
911401535946	SM378B S P8 940 PSD-E MB D100 G-TT PRO	9 W
911401536046	SM378B S P8 927 PSD-E WB D100 G-TT PRO	9 W
911401536146	SM378B S P8 930 PSD-E WB D100 G-TT PRO	9 W
911401536246	SM378B S P8 940 PSD-E WB D100 G-TT PRO	9 W
911401536346	SM378B S P12 927 PSD-E NB D100 G-TT PRO	13 W
911401536446	SM378B S P12 930 PSD-E NB D100 G-TT PRO	13 W
911401536546	SM378B S P12 940 PSD-E NB D100 G-TT PRO	13 W
911401536646	SM378B S P12 927 PSD-E MB D100 G-TT PRO	13 W
911401536746	SM378B S P12 930 PSD-E MB D100 G-TT PRO	13 W
911401536846	SM378B S P12 940 PSD-E MB D100 G-TT PRO	13 W
911401536946	SM378B S P12 927 PSD-E WB D100 G-TT PRO	13 W
911401537046	SM378B S P12 930 PSD-E WB D100 G-TT PRO	13 W
911401537146	SM378B S P12 940 PSD-E WB D100 G-TT PRO	13 W
911401537246	SM378B S P14 927 PSD-E NB D100 G-TT PRO	14.5 W
911401537346	SM378B S P14 930 PSD-E NB D100 G-TT PRO	14.5 W
911401537446	SM378B S P14 940 PSD-E NB D100 G-TT PRO	14.5 W
911401537546	SM378B S P14 927 PSD-E MB D100 G-TT PRO	14.5 W
911401537646	SM378B S P14 930 PSD-E MB D100 G-TT PRO	14.5 W
911401537746	SM378B S P14 940 PSD-E MB D100 G-TT PRO	14.5 W

Order Code	Full Product Name	Power Consumption
911401537846	SM378B S P14 927 PSD-E WB D100 G-TT PRO	14.5 W
911401537946	SM378B S P14 930 PSD-E WB D100 G-TT PRO	14.5 W
911401538046	SM378B S P14 940 PSD-E WB D100 G-TT PRO	14.5 W
911401538146	SM378X S P8 930 WIA MB D100 G-TT PRO	8.2 W
911401538246	SM378X S P8 930 WIA WB D100 G-TT PRO	8.2 W
911401538346	SM378X S P12 930 WIA MB D100 G-TT PRO	12 W
911401538446	SM378X S P12 930 WIA WB D100 G-TT PRO	12 W
911401538546	SM378X S P14 930 WIA MB D100 G-TT PRO	14 W
911401538646	SM378X S P14 930 WIA WB D100 G-TT PRO	14 W
911401538746	SM378X S P20 930 WIA MB D100 G-TT PRO	20 W
911401538846	SM378X S P20 930 WIA WB D100 G-TT PRO	20 W
911401538946	SM378B S P9 PSD-TNW NB D100 G-TT PRO	9 W
911401539046	SM378B S P9 PSD-TNW MB D100 G-TT PRO	9 W
911401539146	SM378B S P9 PSD-TNW WB D100 G-TT PRO	9 W
911401539246	SM378B S P12 PSD-TNW NB D100 G-TT PRO	13 W
911401539346	SM378B S P12 PSD-TNW MB D100 G-TT PRO	13 W
911401539446	SM378B S P12 PSD-TNW WB D100 G-TT PRO	13 W
911401539546	SM378B S P15 PSD-TNW NB D100 G-TT PRO	15.5 W
911401539646	SM378B S P15 PSD-TNW MB D100 G-TT PRO	15.5 W
911401539746	SM378B S P15 PSD-TNW WB D100 G-TT PRO	15.5 W
911401539846	SM378B S P22 PSD-TNW NB D100 G-TT PRO	22 W
911401539946	SM378B S P22 PSD-TNW MB D100 G-TT PRO	22 W
911401540046	SM378B S P22 PSD-TNW WB D100 G-TT PRO	22 W
911401503046	RS378B P12 927 PSU-E NB M55 PRO	12.6 W
911401503146	RS378B P12 930 PSU-E NB M55 PRO	12.6 W
911401503246	RS378B P12 940 PSU-E NB M55 PRO	12.6 W
911401503346	RS378B P12 927 PSU-E MB M55 PRO	12.6 W
911401503446	RS378B P12 930 PSU-E MB M55 PRO	12.6 W
911401503546	RS378B P12 940 PSU-E MB M55 PRO	12.6 W
911401503646	RS378B P12 927 PSU-E WB M55 PRO	12.6 W
911401503746	RS378B P12 930 PSU-E WB M55 PRO	12.6 W
911401503846	RS378B P12 940 PSU-E WB M55 PRO	12.6 W
911401503946	RS378B P14 927 PSU-E NB M55 PRO	14.5 W
911401504046	RS378B P14 930 PSU-E NB M55 PRO	14.5 W
911401504146	RS378B P14 940 PSU-E NB M55 PRO	14.5 W
911401504246	RS378B P14 927 PSU-E MB M55 PRO	14.5 W
911401504346	RS378B P14 930 PSU-E MB M55 PRO	14.5 W

Order Code	Full Product Name	Power Consumption
911401504446	RS378B P14 940 PSU-E MB M55 PRO	14.5 W
911401504546	RS378B P14 927 PSU-E WB M55 PRO	14.5 W
911401504646	RS378B P14 930 PSU-E WB M55 PRO	14.5 W
911401504746	RS378B P14 940 PSU-E WB M55 PRO	14.5 W
911401506946	RS378B P13 927 PSD-E NB M55 PRO	13.5 W
911401507046	RS378B P13 930 PSD-E NB M55 PRO	13.5 W
911401507146	RS378B P13 940 PSD-E NB M55 PRO	13.5 W
911401507246	RS378B P13 927 PSD-E MB M55 PRO	13.5 W
911401507346	RS378B P13 930 PSD-E MB M55 PRO	13.5 W
911401507446	RS378B P13 940 PSD-E MB M55 PRO	13.5 W
911401507546	RS378B P13 927 PSD-E WB M55 PRO	13.5 W
911401507646	RS378B P13 930 PSD-E WB M55 PRO	13.5 W
911401507746	RS378B P13 940 PSD-E WB M55 PRO	13.5 W
911401507846	RS378B P15 927 PSD-E NB M55 PRO	15.5 W
911401507946	RS378B P15 930 PSD-E NB M55 PRO	15.5 W
911401508046	RS378B P15 940 PSD-E NB M55 PRO	15.5 W
911401508146	RS378B P15 927 PSD-E MB M55 PRO	15.5 W
911401508246	RS378B P15 930 PSD-E MB M55 PRO	15.5 W
911401508346	RS378B P15 940 PSD-E MB M55 PRO	15.5 W
911401508446	RS378B P15 927 PSD-E WB M55 PRO	15.5 W
911401508546	RS378B P15 930 PSD-E WB M55 PRO	15.5 W
911401508646	RS378B P15 940 PSD-E WB M55 PRO	15.5 W
911401508946	RS378X P12 930 WIA MB M55 PRO	12.8 W
911401509046	RS378X P12 930 WIA WB M55 PRO	12.8 W
911401509146	RS378X P14 930 WIA MB M55 PRO	15 W
911401509246	RS378X P14 930 WIA WB M55 PRO	15 W
911401509746	RS378B P12 930 PSU-E MB M55 WP PRO	12.6 W
911401509846	RS378B P12 930 PSU-E WB M55 WP PRO	12.6 W
911401509946	RS378B P14 930 PSU-E MB M55 WP PRO	14.5 W
911401510046	RS378B P14 930 PSU-E WB M55 WP PRO	14.5 W
911401519546	RS378B P13 PSD-TNW NB M55 PRO	13.5 W
911401519646	RS378B P13 PSD-TNW MB M55 PRO	13.5 W
911401519746	RS378B P13 PSD-TNW WB M55 PRO	13.5 W
911401519846	RS378B P15 PSD-TNW NB M55 PRO	15 W
911401519946	RS378B P15 PSD-TNW MB M55 PRO	15 W
911401520046	RS378B P15 PSD-TNW WB M55 PRO	15 W

Controls and Dimming

Order Code	Full Product Name	Dimmable
911401521646	SM378B R P8 927 PSU-E NB D100 G-TT PRO	-
911401521746	SM378B R P8 930 PSU-E NB D100 G-TT PRO	-
911401521846	SM378B R P8 940 PSU-E NB D100 G-TT PRO	-
911401521946	SM378B R P8 927 PSU-E MB D100 G-TT PRO	-
911401522046	SM378B R P8 930 PSU-E MB D100 G-TT PRO	-
911401522146	SM378B R P8 940 PSU-E MB D100 G-TT PRO	-
911401522246	SM378B R P8 927 PSU-E WB D100 G-TT PRO	-
911401522346	SM378B R P8 930 PSU-E WB D100 G-TT PRO	-
911401522446	SM378B R P8 940 PSU-E WB D100 G-TT PRO	-
911401522546	SM378B R P11 927 PSU-E NB D100 G-TT PRO	-
911401522646	SM378B R P11 930 PSU-E NB D100 G-TT PRO	-

Order Code	Full Product Name	Dimmable
911401522746	SM378B R P11 940 PSU-E NB D100 G-TT PRO	-
911401522846	SM378B R P11 927 PSU-E MB D100 G-TT PRO	-
911401522946	SM378B R P11 930 PSU-E MB D100 G-TT PRO	-
911401523046	SM378B R P11 940 PSU-E MB D100 G-TT PRO	-
911401523146	SM378B R P11 927 PSU-E WB D100 G-TT PRO	-
911401523246	SM378B R P11 930 PSU-E WB D100 G-TT PRO	-
911401523346	SM378B R P11 940 PSU-E WB D100 G-TT PRO	-
911401523446	SM378B R P13 927 PSU-E NB D100 G-TT PRO	-
911401523546	SM378B R P13 930 PSU-E NB D100 G-TT PRO	-
911401523646	SM378B R P13 940 PSU-E NB D100 G-TT PRO	-
911401523746	SM378B R P13 927 PSU-E MB D100 G-TT PRO	-

Order Code	Full Product Name	Dimmable
911401523846	SM378B R P13 930 PSU-E MB D100 G-TT PRO	-
911401523946	SM378B R P13 940 PSU-E MB D100 G-TT PRO	-
911401524046	SM378B R P13 927 PSU-E WB D100 G-TT PRO	-
911401524146	SM378B R P13 930 PSU-E WB D100 G-TT PRO	-
911401524246	SM378B R P13 940 PSU-E WB D100 G-TT PRO	-
911401524346	SM378B R P20 927 PSU-E NB D100 G-TT PRO	-
911401524446	SM378B R P20 930 PSU-E NB D100 G-TT PRO	-
911401524546	SM378B R P20 940 PSU-E NB D100 G-TT PRO	-
911401524646	SM378B R P20 927 PSU-E MB D100 G-TT PRO	-
911401524746	SM378B R P20 930 PSU-E MB D100 G-TT PRO	-
911401524846	SM378B R P20 940 PSU-E MB D100 G-TT PRO	-
911401524946	SM378B R P20 927 PSU-E WB D100 G-TT PRO	-
911401525046	SM378B R P20 930 PSU-E WB D100 G-TT PRO	-
911401525146	SM378B R P20 940 PSU-E WB D100 G-TT PRO	-
911401525246	SM378B R P20 927 PSD-E NB D100 G-TT PRO	DALI
911401525346	SM378B R P20 930 PSD-E NB D100 G-TT PRO	DALI
911401525446	SM378B R P20 940 PSD-E NB D100 G-TT PRO	DALI
911401525546	SM378B R P20 927 PSD-E MB D100 G-TT PRO	DALI
911401525646	SM378B R P20 930 PSD-E MB D100 G-TT PRO	DALI
911401525746	SM378B R P20 940 PSD-E MB D100 G-TT PRO	DALI
911401525846	SM378B R P20 927 PSD-E WB D100 G-TT PRO	DALI
911401525946	SM378B R P20 930 PSD-E WB D100 G-TT PRO	DALI
911401526046	SM378B R P20 940 PSD-E WB D100 G-TT PRO	DALI
911401526146	SM378B R P8 927 PSD-E NB D100 G-TT PRO	DALI
911401526246	SM378B R P8 930 PSD-E NB D100 G-TT PRO	DALI
911401526346	SM378B R P8 940 PSD-E NB D100 G-TT PRO	DALI
911401526446	SM378B R P8 927 PSD-E MB D100 G-TT PRO	DALI
911401526546	SM378B R P8 930 PSD-E MB D100 G-TT PRO	DALI
911401526646	SM378B R P8 940 PSD-E MB D100 G-TT PRO	DALI
911401526746	SM378B R P8 927 PSD-E WB D100 G-TT PRO	DALI
911401526846	SM378B R P8 930 PSD-E WB D100 G-TT PRO	DALI
911401526946	SM378B R P8 940 PSD-E WB D100 G-TT PRO	DALI
911401527046	SM378B R P12 927 PSD-E NB D100 G-TT PRO	DALI
911401527146	SM378B R P12 930 PSD-E NB D100 G-TT PRO	DALI
911401527246	SM378B R P12 940 PSD-E NB D100 G-TT PRO	DALI
911401527346	SM378B R P12 927 PSD-E MB D100 G-TT PRO	DALI
911401527446	SM378B R P12 930 PSD-E MB D100 G-TT PRO	DALI
911401527546	SM378B R P12 940 PSD-E MB D100 G-TT PRO	DALI
911401527646	SM378B R P12 927 PSD-E WB D100 G-TT PRO	DALI
911401527746	SM378B R P12 930 PSD-E WB D100 G-TT PRO	DALI
911401527846	SM378B R P12 940 PSD-E WB D100 G-TT PRO	DALI
911401527946	SM378B R P14 927 PSD-E NB D100 G-TT PRO	DALI
911401528046	SM378B R P14 930 PSD-E NB D100 G-TT PRO	DALI
911401528146	SM378B R P14 940 PSD-E NB D100 G-TT PRO	DALI
911401528246	SM378B R P14 927 PSD-E MB D100 G-TT PRO	DALI
911401528346	SM378B R P14 930 PSD-E MB D100 G-TT PRO	DALI
911401528446	SM378B R P14 940 PSD-E MB D100 G-TT PRO	DALI
911401528546	SM378B R P14 927 PSD-E WB D100 G-TT PRO	DALI
911401528646	SM378B R P14 930 PSD-E WB D100 G-TT PRO	DALI
911401528746	SM378B R P14 940 PSD-E WB D100 G-TT PRO	DALI
911401528846	SM378X R P8 930 WIA MB D100 G-TT PRO	Wireless Dim
911401528946	SM378X R P8 930 WIA WB D100 G-TT PRO	Wireless Dim

Order Code	Full Product Name	Dimmable
911401529046	SM378X R P12 930 WIA MB D100 G-TT PRO	Wireless Dim
911401529146	SM378X R P12 930 WIA WB D100 G-TT PRO	Wireless Dim
911401529246	SM378X R P14 930 WIA MB D100 G-TT PRO	Wireless Dim
911401529346	SM378X R P14 930 WIA WB D100 G-TT PRO	Wireless Dim
911401529446	SM378X R P20 930 WIA MB D100 G-TT PRO	Wireless Dim
911401529546	SM378X R P20 930 WIA WB D100 G-TT PRO	Wireless Dim
911401529646	SM378B R P9 PSD-TNW NB D100 G-TT PRO	DALI
911401529746	SM378B R P9 PSD-TNW MB D100 G-TT PRO	DALI
911401529846	SM378B R P9 PSD-TNW WB D100 G-TT PRO	DALI
911401529946	SM378B R P12 PSD-TNW NB D100 G-TT PRO	DALI
911401530046	SM378B R P12 PSD-TNW MB D100 G-TT PRO	DALI
911401530146	SM378B R P12 PSD-TNW WB D100 G-TT PRO	DALI
911401530246	SM378B R P15 PSD-TNW NB D100 G-TT PRO	DALI
911401530346	SM378B R P15 PSD-TNW MB D100 G-TT PRO	DALI
911401530446	SM378B R P15 PSD-TNW WB D100 G-TT PRO	DALI
911401530546	SM378B R P22 PSD-TNW NB D100 G-TT PRO	DALI
911401530646	SM378B R P22 PSD-TNW MB D100 G-TT PRO	DALI
911401530746	SM378B R P22 PSD-TNW WB D100 G-TT PRO	DALI
911401500046	RS378B P7 930 PSD-E WB M43 PRO	DALI
911401500146	RS378B P7 940 PSD-E WB M43 PRO	DALI
911401500246	RS378B P6 930 PSU-E MB M43 WP PRO	-
911401500346	RS378B P6 930 PSU-E WB M43 WP PRO	-
911401500446	RS378B P8 930 PSU-E MB M43 WP PRO	-
911401500546	RS378B P8 930 PSU-E WB M43 WP PRO	-
911401520146	RS378B P7 PSD-TNW NB M43 PRO	DALI
911401520246	RS378B P7 PSD-TNW MB M43 PRO	DALI
911401520346	RS378B P7 PSD-TNW WB M43 PRO	DALI
911401596945	RS378B P6 927 PSU-E SNB M43 PRO	-
911401597045	RS378B P6 930 PSU-E SNB M43 PRO	-
911401597145	RS378B P6 940 PSU-E SNB M43 PRO	-
911401597245	RS378B P6 927 PSU-E NB M43 PRO	-
911401597345	RS378B P6 930 PSU-E NB M43 PRO	-
911401597445	RS378B P6 940 PSU-E NB M43 PRO	-
911401597545	RS378B P6 927 PSU-E MB M43 PRO	-
911401597645	RS378B P6 930 PSU-E MB M43 PRO	-
911401597745	RS378B P6 940 PSU-E MB M43 PRO	-
911401597845	RS378B P6 927 PSU-E WB M43 PRO	-
911401597945	RS378B P6 930 PSU-E WB M43 PRO	-
911401598045	RS378B P6 940 PSU-E WB M43 PRO	-
911401598145	RS378B P8 927 PSU-E NB M43 PRO	-
911401598245	RS378B P8 930 PSU-E NB M43 PRO	-
911401598345	RS378B P8 940 PSU-E NB M43 PRO	-
911401598445	RS378B P8 927 PSU-E MB M43 PRO	-
911401598545	RS378B P8 930 PSU-E MB M43 PRO	-
911401598645	RS378B P8 940 PSU-E MB M43 PRO	-
911401598745	RS378B P8 927 PSU-E WB M43 PRO	-
911401598845	RS378B P8 930 PSU-E WB M43 PRO	-
911401598945	RS378B P8 940 PSU-E WB M43 PRO	-
911401599045	RS378B P7 927 PSD-E SNB M43 PRO	DALI
911401599145	RS378B P7 930 PSD-E SNB M43 PRO	DALI
911401599245	RS378B P7 940 PSD-E SNB M43 PRO	DALI
911401599345	RS378B P7 927 PSD-E NB M43 PRO	DALI

Order Code	Full Product Name	Dimmable
911401599445	RS378B P7 930 PSD-E NB M43 PRO	DALI
911401599545	RS378B P7 940 PSD-E NB M43 PRO	DALI
911401599645	RS378B P7 927 PSD-E MB M43 PRO	DALI
911401599745	RS378B P7 930 PSD-E MB M43 PRO	DALI
911401599845	RS378B P7 940 PSD-E MB M43 PRO	DALI
911401599945	RS378B P7 927 PSD-E WB M43 PRO	DALI
911401500646	RS378B P7 927 PSU-E SNB M55 PRO	-
911401500746	RS378B P7 930 PSU-E SNB M55 PRO	-
911401500846	RS378B P7 940 PSU-E SNB M55 PRO	-
911401500946	RS378B P7 927 PSU-E NB M55 PRO	-
911401501046	RS378B P7 930 PSU-E NB M55 PRO	-
911401501146	RS378B P7 940 PSU-E NB M55 PRO	-
911401501246	RS378B P7 927 PSU-E MB M55 PRO	-
911401501346	RS378B P7 930 PSU-E MB M55 PRO	-
911401501446	RS378B P7 940 PSU-E MB M55 PRO	-
911401501546	RS378B P7 927 PSU-E WB M55 PRO	-
911401501646	RS378B P7 930 PSU-E WB M55 PRO	-
911401501746	RS378B P7 940 PSU-E WB M55 PRO	-
911401501846	RS378B P8 927 PSU-E SNB M55 PRO	-
911401501946	RS378B P8 930 PSU-E SNB M55 PRO	-
911401502046	RS378B P8 940 PSU-E SNB M55 PRO	-
911401502146	RS378B P9 927 PSU-E NB M55 PRO	-
911401502246	RS378B P9 930 PSU-E NB M55 PRO	-
911401502346	RS378B P9 940 PSU-E NB M55 PRO	-
911401502446	RS378B P9 927 PSU-E MB M55 PRO	-
911401502546	RS378B P9 930 PSU-E MB M55 PRO	-
911401502646	RS378B P9 940 PSU-E MB M55 PRO	-
911401502746	RS378B P9 927 PSU-E WB M55 PRO	-
911401502846	RS378B P9 930 PSU-E WB M55 PRO	-
911401502946	RS378B P9 940 PSU-E WB M55 PRO	-
911401504846	RS378B P7 927 PSD-E SNB M55 PRO	DALI
911401504946	RS378B P7 930 PSD-E SNB M55 PRO	DALI
911401505046	RS378B P7 940 PSD-E SNB M55 PRO	DALI
911401505146	RS378B P7 927 PSD-E NB M55 PRO	DALI
911401505246	RS378B P7 930 PSD-E NB M55 PRO	DALI
911401505346	RS378B P7 940 PSD-E NB M55 PRO	DALI
911401505446	RS378B P7 927 PSD-E MB M55 PRO	DALI
911401505546	RS378B P7 930 PSD-E MB M55 PRO	DALI
911401505646	RS378B P7 940 PSD-E MB M55 PRO	DALI
911401505746	RS378B P7 927 PSD-E WB M55 PRO	DALI
911401505846	RS378B P7 930 PSD-E WB M55 PRO	DALI
911401505946	RS378B P7 940 PSD-E WB M55 PRO	DALI
911401506046	RS378B P9 927 PSD-E NB M55 PRO	DALI
911401506146	RS378B P9 930 PSD-E NB M55 PRO	DALI
911401506246	RS378B P9 940 PSD-E NB M55 PRO	DALI
911401506346	RS378B P9 927 PSD-E MB M55 PRO	DALI
911401506446	RS378B P9 930 PSD-E MB M55 PRO	DALI
911401506546	RS378B P9 940 PSD-E MB M55 PRO	DALI
911401506646	RS378B P9 927 PSD-E WB M55 PRO	DALI
911401506746	RS378B P9 930 PSD-E WB M55 PRO	DALI
911401506846	RS378B P9 940 PSD-E WB M55 PRO	DALI
911401508746	RS378X P9 930 WIA MB M55 PRO	Wireless Dim

Order Code	Full Product Name	Dimmable
911401508846	RS378X P9 930 WIA WB M55 PRO	Wireless Dim
911401509346	RS378B P7 930 PSU-E MB M55 WP PRO	-
911401509446	RS378B P7 930 PSU-E WB M55 WP PRO	-
911401509546	RS378B P9 930 PSU-E MB M55 WP PRO	-
911401509646	RS378B P9 930 PSU-E WB M55 WP PRO	-
911401518946	RS378B P7 PSD-TNW NB M55 PRO	DALI
911401519046	RS378B P7 PSD-TNW MB M55 PRO	DALI
911401519146	RS378B P7 PSD-TNW WB M55 PRO	DALI
911401519246	RS378B P9 PSD-TNW NB M55 PRO	DALI
911401519346	RS378B P9 PSD-TNW MB M55 PRO	DALI
911401519446	RS378B P9 PSD-TNW WB M55 PRO	DALI
911401595145	RS378B P3 927 PSU-E MB D35 G-TT PRO	-
911401595245	RS378B P3 930 PSU-E MB D35 G-TT PRO	-
911401595345	RS378B P3 940 PSU-E MB D35 G-TT PRO	-
911401595445	RS378B P3 927 PSU-E WB D35 G-TT PRO	-
911401595545	RS378B P3 930 PSU-E WB D35 G-TT PRO	-
911401595645	RS378B P3 940 PSU-E WB D35 G-TT PRO	-
911401595745	RS378B P5 927 PSU-E MB D35 G-TT PRO	-
911401595845	RS378B P5 930 PSU-E MB D35 G-TT PRO	-
911401595945	RS378B P5 940 PSU-E MB D35 G-TT PRO	-
911401596045	RS378B P5 927 PSU-E WB D35 G-TT PRO	-
911401596145	RS378B P5 930 PSU-E WB D35 G-TT PRO	-
911401596245	RS378B P5 940 PSU-E WB D35 G-TT PRO	-
911401596345	RS378B P5 927 PSD-E MB D35 G-TT PRO	DALI
911401596445	RS378B P5 930 PSD-E MB D35 G-TT PRO	DALI
911401596545	RS378B P5 940 PSD-E MB D35 G-TT PRO	DALI
911401596645	RS378B P5 927 PSD-E WB D35 G-TT PRO	DALI
911401596745	RS378B P5 930 PSD-E WB D35 G-TT PRO	DALI
911401596845	RS378B P5 940 PSD-E WB D35 G-TT PRO	DALI
911401510146	RS378B P12 927 PSU-E NB M70 PRO	-
911401510246	RS378B P12 930 PSU-E NB M70 PRO	-
911401510346	RS378B P12 940 PSU-E NB M70 PRO	-
911401510446	RS378B P12 927 PSU-E MB M70 PRO	-
911401510546	RS378B P12 930 PSU-E MB M70 PRO	-
911401510646	RS378B P12 940 PSU-E MB M70 PRO	-
911401510746	RS378B P12 927 PSU-E WB M70 PRO	-
911401510846	RS378B P12 930 PSU-E WB M70 PRO	-
911401510946	RS378B P12 940 PSU-E WB M70 PRO	-
911401511046	RS378B P17 927 PSU-E NB M70 PRO	-
911401511146	RS378B P17 930 PSU-E NB M70 PRO	-
911401511246	RS378B P17 940 PSU-E NB M70 PRO	-
911401511346	RS378B P17 927 PSU-E MB M70 PRO	-
911401511446	RS378B P17 930 PSU-E MB M70 PRO	-
911401511546	RS378B P17 940 PSU-E MB M70 PRO	-
911401511646	RS378B P17 927 PSU-E WB M70 PRO	-
911401511746	RS378B P17 930 PSU-E WB M70 PRO	-
911401511846	RS378B P17 940 PSU-E WB M70 PRO	-
911401511946	RS378B P19 927 PSU-E NB M70 PRO	-
911401512046	RS378B P19 930 PSU-E NB M70 PRO	-
911401512146	RS378B P19 940 PSU-E NB M70 PRO	-
911401512246	RS378B P19 927 PSU-E MB M70 PRO	-
911401512346	RS378B P19 930 PSU-E MB M70 PRO	-

Order Code	Full Product Name	Dimmable
911401512446	RS378B P19 940 PSU-E MB M70 PRO	-
911401512546	RS378B P19 927 PSU-E WB M70 PRO	-
911401512646	RS378B P19 930 PSU-E WB M70 PRO	-
911401512746	RS378B P19 940 PSU-E WB M70 PRO	-
911401513746	RS378B P12 927 PSD-E NB M70 PRO	DALI
911401513846	RS378B P12 930 PSD-E NB M70 PRO	DALI
911401513946	RS378B P12 940 PSD-E NB M70 PRO	DALI
911401514046	RS378B P12 927 PSD-E MB M70 PRO	DALI
911401514146	RS378B P12 930 PSD-E MB M70 PRO	DALI
911401514246	RS378B P12 940 PSD-E MB M70 PRO	DALI
911401514346	RS378B P12 927 PSD-E WB M70 PRO	DALI
911401514446	RS378B P12 930 PSD-E WB M70 PRO	DALI
911401514546	RS378B P12 940 PSD-E WB M70 PRO	DALI
911401514646	RS378B P18 927 PSD-E NB M70 PRO	DALI
911401514746	RS378B P18 930 PSD-E NB M70 PRO	DALI
911401514846	RS378B P18 940 PSD-E NB M70 PRO	DALI
911401514946	RS378B P18 927 PSD-E MB M70 PRO	DALI
911401515046	RS378B P18 930 PSD-E MB M70 PRO	DALI
911401515146	RS378B P18 940 PSD-E MB M70 PRO	DALI
911401515246	RS378B P18 927 PSD-E WB M70 PRO	DALI
911401515346	RS378B P18 930 PSD-E WB M70 PRO	DALI
911401515446	RS378B P18 940 PSD-E WB M70 PRO	DALI
911401515546	RS378B P20 927 PSD-E NB M70 PRO	DALI
911401515646	RS378B P20 930 PSD-E NB M70 PRO	DALI
911401515746	RS378B P20 940 PSD-E NB M70 PRO	DALI
911401515846	RS378B P20 927 PSD-E MB M70 PRO	DALI
911401515946	RS378B P20 930 PSD-E MB M70 PRO	DALI
911401516046	RS378B P20 940 PSD-E MB M70 PRO	DALI
911401516146	RS378B P20 927 PSD-E WB M70 PRO	DALI
911401516246	RS378B P20 930 PSD-E WB M70 PRO	DALI
911401516346	RS378B P20 940 PSD-E WB M70 PRO	DALI
911401517346	RS378X P12 930 WIA MB M70 PRO	Wireless Dim
911401517446	RS378X P12 930 WIA WB M70 PRO	Wireless Dim
911401517546	RS378X P19 930 WIA MB M70 PRO	Wireless Dim
911401517646	RS378X P19 930 WIA WB M70 PRO	Wireless Dim
911401517746	RS378X P18 930 WIA MB M70 PRO	Wireless Dim
911401517846	RS378X P18 930 WIA WB M70 PRO	Wireless Dim
911401518146	RS378B P12 930 PSU-E MB M70 WP PRO	-
911401518246	RS378B P12 930 PSU-E WB M70 WP PRO	-
911401518346	RS378B P17 930 PSU-E MB M70 WP PRO	-
911401518446	RS378B P17 930 PSU-E WB M70 WP PRO	-
911401518546	RS378B P19 930 PSU-E MB M70 WP PRO	-
911401518646	RS378B P19 930 PSU-E WB M70 WP PRO	-
911401520446	RS378B P13 PSD-TNW NB M70 PRO	DALI
911401520546	RS378B P13 PSD-TNW MB M70 PRO	DALI
911401520646	RS378B P13 PSD-TNW WB M70 PRO	DALI
911401520746	RS378B P19 PSD-TNW NB M70 PRO	DALI
911401520846	RS378B P19 PSD-TNW MB M70 PRO	DALI
911401520946	RS378B P19 PSD-TNW WB M70 PRO	DALI
911401521046	RS378B P22 PSD-TNW NB M70 PRO	DALI
911401521146	RS378B P22 PSD-TNW MB M70 PRO	DALI
911401521246	RS378B P22 PSD-TNW WB M70 PRO	DALI

Order Code	Full Product Name	Dimmable
911401512846	RS378B P27 927 PSU-E NB M70 PRO	-
911401512946	RS378B P27 930 PSU-E NB M70 PRO	-
911401513046	RS378B P27 940 PSU-E NB M70 PRO	-
911401513146	RS378B P27 927 PSU-E MB M70 PRO	-
911401513246	RS378B P27 930 PSU-E MB M70 PRO	-
911401513346	RS378B P27 940 PSU-E MB M70 PRO	-
911401513446	RS378B P27 927 PSU-E WB M70 PRO	-
911401513546	RS378B P27 930 PSU-E WB M70 PRO	-
911401513646	RS378B P27 940 PSU-E WB M70 PRO	-
911401516446	RS378B P27 927 PSD-E NB M70 PRO	DALI
911401516546	RS378B P27 930 PSD-E NB M70 PRO	DALI
911401516646	RS378B P27 940 PSD-E NB M70 PRO	DALI
911401516746	RS378B P27 927 PSD-E MB M70 PRO	DALI
911401516846	RS378B P27 930 PSD-E MB M70 PRO	DALI
911401516946	RS378B P27 940 PSD-E MB M70 PRO	DALI
911401517046	RS378B P27 927 PSD-E WB M70 PRO	DALI
911401517146	RS378B P27 930 PSD-E WB M70 PRO	DALI
911401517246	RS378B P27 940 PSD-E WB M70 PRO	DALI
911401517946	RS378X P28 930 WIA MB M70 PRO	Wireless Dim
911401518046	RS378X P28 930 WIA WB M70 PRO	Wireless Dim
911401518746	RS378B P27 930 PSU-E MB M70 WP PRO	-
911401518846	RS378B P27 930 PSU-E WB M70 WP PRO	-
911401521346	RS378B P29 PSD-TNW NB M70 PRO	DALI
911401521446	RS378B P29 PSD-TNW MB M70 PRO	DALI
911401521546	RS378B P29 PSD-TNW WB M70 PRO	DALI
911401530846	SM378B S P8 927 PSU-E NB D100 G-TT PRO	-
911401530946	SM378B S P8 930 PSU-E NB D100 G-TT PRO	-
911401531046	SM378B S P8 940 PSU-E NB D100 G-TT PRO	-
911401531146	SM378B S P8 927 PSU-E MB D100 G-TT PRO	-
911401531246	SM378B S P8 930 PSU-E MB D100 G-TT PRO	-
911401531346	SM378B S P8 940 PSU-E MB D100 G-TT PRO	-
911401531446	SM378B S P8 927 PSU-E WB D100 G-TT PRO	-
911401531546	SM378B S P8 930 PSU-E WB D100 G-TT PRO	-
911401531646	SM378B S P8 940 PSU-E WB D100 G-TT PRO	-
911401531746	SM378B S P11 927 PSU-E NB D100 G-TT PRO	-
911401531846	SM378B S P11 930 PSU-E NB D100 G-TT PRO	-
911401531946	SM378B S P11 940 PSU-E NB D100 G-TT PRO	-
911401532046	SM378B S P11 927 PSU-E MB D100 G-TT PRO	-
911401532146	SM378B S P11 930 PSU-E MB D100 G-TT PRO	-
911401532246	SM378B S P11 940 PSU-E MB D100 G-TT PRO	-
911401532346	SM378B S P11 927 PSU-E WB D100 G-TT PRO	-
911401532446	SM378B S P11 930 PSU-E WB D100 G-TT PRO	-
911401532546	SM378B S P11 940 PSU-E WB D100 G-TT PRO	-
911401532646	SM378B S P13 927 PSU-E NB D100 G-TT PRO	-
911401532746	SM378B S P13 930 PSU-E NB D100 G-TT PRO	-
911401532846	SM378B S P13 940 PSU-E NB D100 G-TT PRO	-
911401532946	SM378B S P13 927 PSU-E MB D100 G-TT PRO	-
911401533046	SM378B S P13 930 PSU-E MB D100 G-TT PRO	-
911401533146	SM378B S P13 940 PSU-E MB D100 G-TT PRO	-
911401533246	SM378B S P13 927 PSU-E WB D100 G-TT PRO	-
911401533346	SM378B S P13 930 PSU-E WB D100 G-TT PRO	-
911401533446	SM378B S P13 940 PSU-E WB D100 G-TT PRO	-

GreenSpace Flex Luna

Order Code	Full Product Name	Dimmable
911401533546	SM378B S P20 927 PSU-E NB D100 G-TT PRO	-
911401533646	SM378B S P20 930 PSU-E NB D100 G-TT PRO	-
911401533746	SM378B S P20 940 PSU-E NB D100 G-TT PRO	-
911401533846	SM378B S P20 927 PSU-E MB D100 G-TT PRO	-
911401533946	SM378B S P20 930 PSU-E MB D100 G-TT PRO	-
911401534046	SM378B S P20 940 PSU-E MB D100 G-TT PRO	-
911401534146	SM378B S P20 927 PSU-E WB D100 G-TT PRO	-
911401534246	SM378B S P20 930 PSU-E WB D100 G-TT PRO	-
911401534346	SM378B S P20 940 PSU-E WB D100 G-TT PRO	-
911401534446	SM378B S P20 927 PSD-E NB D100 G-TT PRO	DALI
911401534546	SM378B S P20 930 PSD-E NB D100 G-TT PRO	DALI
911401534646	SM378B S P20 940 PSD-E NB D100 G-TT PRO	DALI
911401534746	SM378B S P20 927 PSD-E MB D100 G-TT PRO	DALI
911401534846	SM378B S P20 930 PSD-E MB D100 G-TT PRO	DALI
911401534946	SM378B S P20 940 PSD-E MB D100 G-TT PRO	DALI
911401535046	SM378B S P20 927 PSD-E WB D100 G-TT PRO	DALI
911401535146	SM378B S P20 930 PSD-E WB D100 G-TT PRO	DALI
911401535246	SM378B S P20 940 PSD-E WB D100 G-TT PRO	DALI
911401535446	SM378B S P8 927 PSD-E NB D100 G-TT PRO	DALI
911401535546	SM378B S P8 930 PSD-E NB D100 G-TT PRO	DALI
911401535646	SM378B S P8 940 PSD-E NB D100 G-TT PRO	DALI
911401535746	SM378B S P8 927 PSD-E MB D100 G-TT PRO	DALI
911401535846	SM378B S P8 930 PSD-E MB D100 G-TT PRO	DALI
911401535946	SM378B S P8 940 PSD-E MB D100 G-TT PRO	DALI
911401536046	SM378B S P8 927 PSD-E WB D100 G-TT PRO	DALI
911401536146	SM378B S P8 930 PSD-E WB D100 G-TT PRO	DALI
911401536246	SM378B S P8 940 PSD-E WB D100 G-TT PRO	DALI
911401536346	SM378B S P12 927 PSD-E NB D100 G-TT PRO	DALI
911401536446	SM378B S P12 930 PSD-E NB D100 G-TT PRO	DALI
911401536546	SM378B S P12 940 PSD-E NB D100 G-TT PRO	DALI
911401536646	SM378B S P12 927 PSD-E MB D100 G-TT PRO	DALI
911401536746	SM378B S P12 930 PSD-E MB D100 G-TT PRO	DALI
911401536846	SM378B S P12 940 PSD-E MB D100 G-TT PRO	DALI
911401536946	SM378B S P12 927 PSD-E WB D100 G-TT PRO	DALI
911401537046	SM378B S P12 930 PSD-E WB D100 G-TT PRO	DALI
911401537146	SM378B S P12 940 PSD-E WB D100 G-TT PRO	DALI
911401537246	SM378B S P14 927 PSD-E NB D100 G-TT PRO	DALI
911401537346	SM378B S P14 930 PSD-E NB D100 G-TT PRO	DALI
911401537446	SM378B S P14 940 PSD-E NB D100 G-TT PRO	DALI
911401537546	SM378B S P14 927 PSD-E MB D100 G-TT PRO	DALI
911401537646	SM378B S P14 930 PSD-E MB D100 G-TT PRO	DALI
911401537746	SM378B S P14 940 PSD-E MB D100 G-TT PRO	DALI
911401537846	SM378B S P14 927 PSD-E WB D100 G-TT PRO	DALI
911401537946	SM378B S P14 930 PSD-E WB D100 G-TT PRO	DALI
911401538046	SM378B S P14 940 PSD-E WB D100 G-TT PRO	DALI
911401538146	SM378X S P8 930 WIA MB D100 G-TT PRO	Wireless Dim
911401538246	SM378X S P8 930 WIA WB D100 G-TT PRO	Wireless Dim
911401538346	SM378X S P12 930 WIA MB D100 G-TT PRO	Wireless Dim
911401538446	SM378X S P12 930 WIA WB D100 G-TT PRO	Wireless Dim
911401538546	SM378X S P14 930 WIA MB D100 G-TT PRO	Wireless Dim
911401538646	SM378X S P14 930 WIA WB D100 G-TT PRO	Wireless Dim
911401538746	SM378X S P20 930 WIA MB D100 G-TT PRO	Wireless Dim

Order Code	Full Product Name	Dimmable
911401538846	SM378X S P20 930 WIA WB D100 G-TT PRO	Wireless Dim
911401538946	SM378B S P9 PSD-TNW NB D100 G-TT PRO	DALI
911401539046	SM378B S P9 PSD-TNW MB D100 G-TT PRO	DALI
911401539146	SM378B S P9 PSD-TNW WB D100 G-TT PRO	DALI
911401539246	SM378B S P12 PSD-TNW NB D100 G-TT PRO	DALI
911401539346	SM378B S P12 PSD-TNW MB D100 G-TT PRO	DALI
911401539446	SM378B S P12 PSD-TNW WB D100 G-TT PRO	DALI
911401539546	SM378B S P15 PSD-TNW NB D100 G-TT PRO	DALI
911401539646	SM378B S P15 PSD-TNW MB D100 G-TT PRO	DALI
911401539746	SM378B S P15 PSD-TNW WB D100 G-TT PRO	DALI
911401539846	SM378B S P22 PSD-TNW NB D100 G-TT PRO	DALI
911401539946	SM378B S P22 PSD-TNW MB D100 G-TT PRO	DALI
911401540046	SM378B S P22 PSD-TNW WB D100 G-TT PRO	DALI
911401503046	RS378B P12 927 PSU-E NB M55 PRO	-
911401503146	RS378B P12 930 PSU-E NB M55 PRO	-
911401503246	RS378B P12 940 PSU-E NB M55 PRO	-
911401503346	RS378B P12 927 PSU-E MB M55 PRO	-
911401503446	RS378B P12 930 PSU-E MB M55 PRO	-
911401503546	RS378B P12 940 PSU-E MB M55 PRO	-
911401503646	RS378B P12 927 PSU-E WB M55 PRO	-
911401503746	RS378B P12 930 PSU-E WB M55 PRO	-
911401503846	RS378B P12 940 PSU-E WB M55 PRO	-
911401503946	RS378B P14 927 PSU-E NB M55 PRO	-
911401504046	RS378B P14 930 PSU-E NB M55 PRO	-
911401504146	RS378B P14 940 PSU-E NB M55 PRO	-
911401504246	RS378B P14 927 PSU-E MB M55 PRO	-
911401504346	RS378B P14 930 PSU-E MB M55 PRO	-
911401504446	RS378B P14 940 PSU-E MB M55 PRO	-
911401504546	RS378B P14 927 PSU-E WB M55 PRO	-
911401504646	RS378B P14 930 PSU-E WB M55 PRO	-
911401504746	RS378B P14 940 PSU-E WB M55 PRO	-
911401506946	RS378B P13 927 PSD-E NB M55 PRO	DALI
911401507046	RS378B P13 930 PSD-E NB M55 PRO	DALI
911401507146	RS378B P13 940 PSD-E NB M55 PRO	DALI
911401507246	RS378B P13 927 PSD-E MB M55 PRO	DALI
911401507346	RS378B P13 930 PSD-E MB M55 PRO	DALI
911401507446	RS378B P13 940 PSD-E MB M55 PRO	DALI
911401507546	RS378B P13 927 PSD-E WB M55 PRO	DALI
911401507646	RS378B P13 930 PSD-E WB M55 PRO	DALI
911401507746	RS378B P13 940 PSD-E WB M55 PRO	DALI
911401507846	RS378B P15 927 PSD-E NB M55 PRO	DALI
911401507946	RS378B P15 930 PSD-E NB M55 PRO	DALI
911401508046	RS378B P15 940 PSD-E NB M55 PRO	DALI
911401508146	RS378B P15 927 PSD-E MB M55 PRO	DALI
911401508246	RS378B P15 930 PSD-E MB M55 PRO	DALI
911401508346	RS378B P15 940 PSD-E MB M55 PRO	DALI
911401508446	RS378B P15 927 PSD-E WB M55 PRO	DALI
911401508546	RS378B P15 930 PSD-E WB M55 PRO	DALI
911401508646	RS378B P15 940 PSD-E WB M55 PRO	DALI
911401508946	RS378X P12 930 WIA MB M55 PRO	Wireless Dim
911401509046	RS378X P12 930 WIA WB M55 PRO	Wireless Dim
911401509146	RS378X P14 930 WIA MB M55 PRO	Wireless Dim

Order Code	Full Product Name	Dimmable
911401509246	RS378X P14 930 WIA WB M55 PRO	Wireless Dim
911401509746	RS378B P12 930 PSU-E MB M55 WP PRO	-
911401509846	RS378B P12 930 PSU-E WB M55 WP PRO	-
911401509946	RS378B P14 930 PSU-E MB M55 WP PRO	-
911401510046	RS378B P14 930 PSU-E WB M55 WP PRO	-
911401519546	RS378B P13 PSD-TNW NB M55 PRO	DALI

Order Code	Full Product Name	Dimmable
911401519646	RS378B P13 PSD-TNW MB M55 PRO	DALI
911401519746	RS378B P13 PSD-TNW WB M55 PRO	DALI
911401519846	RS378B P15 PSD-TNW NB M55 PRO	DALI
911401519946	RS378B P15 PSD-TNW MB M55 PRO	DALI
911401520046	RS378B P15 PSD-TNW WB M55 PRO	DALI

Mechanical and Housing

Order Code	Full Product Name	Ingress protection code
911401521646	SM378B R P8 927 PSU-E NB D100 G-TT PRO	IP20
911401521746	SM378B R P8 930 PSU-E NB D100 G-TT PRO	IP20
911401521846	SM378B R P8 940 PSU-E NB D100 G-TT PRO	IP20
911401521946	SM378B R P8 927 PSU-E MB D100 G-TT PRO	IP20
911401522046	SM378B R P8 930 PSU-E MB D100 G-TT PRO	IP20
911401522146	SM378B R P8 940 PSU-E MB D100 G-TT PRO	IP20
911401522246	SM378B R P8 927 PSU-E WB D100 G-TT PRO	IP20
911401522346	SM378B R P8 930 PSU-E WB D100 G-TT PRO	IP20
911401522446	SM378B R P8 940 PSU-E WB D100 G-TT PRO	IP20
911401522546	SM378B R P11 927 PSU-E NB D100 G-TT PRO	IP20
911401522646	SM378B R P11 930 PSU-E NB D100 G-TT PRO	IP20
911401522746	SM378B R P11 940 PSU-E NB D100 G-TT PRO	IP20
911401522846	SM378B R P11 927 PSU-E MB D100 G-TT PRO	IP20
911401522946	SM378B R P11 930 PSU-E MB D100 G-TT PRO	IP20
911401523046	SM378B R P11 940 PSU-E MB D100 G-TT PRO	IP20
911401523146	SM378B R P11 927 PSU-E WB D100 G-TT PRO	IP20
911401523246	SM378B R P11 930 PSU-E WB D100 G-TT PRO	IP20
911401523346	SM378B R P11 940 PSU-E WB D100 G-TT PRO	IP20
911401523446	SM378B R P13 927 PSU-E NB D100 G-TT PRO	IP20
911401523546	SM378B R P13 930 PSU-E NB D100 G-TT PRO	IP20
911401523646	SM378B R P13 940 PSU-E NB D100 G-TT PRO	IP20
911401523746	SM378B R P13 927 PSU-E MB D100 G-TT PRO	IP20
911401523846	SM378B R P13 930 PSU-E MB D100 G-TT PRO	IP20
911401523946	SM378B R P13 940 PSU-E MB D100 G-TT PRO	IP20
911401524046	SM378B R P13 927 PSU-E WB D100 G-TT PRO	IP20
911401524146	SM378B R P13 930 PSU-E WB D100 G-TT PRO	IP20
911401524246	SM378B R P13 940 PSU-E WB D100 G-TT PRO	IP20
911401524346	SM378B R P20 927 PSU-E NB D100 G-TT PRO	IP20
911401524446	SM378B R P20 930 PSU-E NB D100 G-TT PRO	IP20
911401524546	SM378B R P20 940 PSU-E NB D100 G-TT PRO	IP20
911401524646	SM378B R P20 927 PSU-E MB D100 G-TT PRO	IP20
911401524746	SM378B R P20 930 PSU-E MB D100 G-TT PRO	IP20
911401524846	SM378B R P20 940 PSU-E MB D100 G-TT PRO	IP20
911401524946	SM378B R P20 927 PSU-E WB D100 G-TT PRO	IP20
911401525046	SM378B R P20 930 PSU-E WB D100 G-TT PRO	IP20
911401525146	SM378B R P20 940 PSU-E WB D100 G-TT PRO	IP20
911401525246	SM378B R P20 927 PSD-E NB D100 G-TT PRO	IP20
911401525346	SM378B R P20 930 PSD-E NB D100 G-TT PRO	IP20
911401525446	SM378B R P20 940 PSD-E NB D100 G-TT PRO	IP20
911401525546	SM378B R P20 927 PSD-E MB D100 G-TT PRO	IP20
911401525646	SM378B R P20 930 PSD-E MB D100 G-TT PRO	IP20

Order Code	Full Product Name	Ingress protection code
911401525746	SM378B R P20 940 PSD-E MB D100 G-TT PRO	IP20
911401525846	SM378B R P20 927 PSD-E WB D100 G-TT PRO	IP20
911401525946	SM378B R P20 930 PSD-E WB D100 G-TT PRO	IP20
911401526046	SM378B R P20 940 PSD-E WB D100 G-TT PRO	IP20
911401526146	SM378B R P8 927 PSD-E NB D100 G-TT PRO	IP20
911401526246	SM378B R P8 930 PSD-E NB D100 G-TT PRO	IP20
911401526346	SM378B R P8 940 PSD-E NB D100 G-TT PRO	IP20
911401526446	SM378B R P8 927 PSD-E MB D100 G-TT PRO	IP20
911401526546	SM378B R P8 930 PSD-E MB D100 G-TT PRO	IP20
911401526646	SM378B R P8 940 PSD-E MB D100 G-TT PRO	IP20
911401526746	SM378B R P8 927 PSD-E WB D100 G-TT PRO	IP20
911401526846	SM378B R P8 930 PSD-E WB D100 G-TT PRO	IP20
911401526946	SM378B R P8 940 PSD-E WB D100 G-TT PRO	IP20
911401527046	SM378B R P12 927 PSD-E NB D100 G-TT PRO	IP20
911401527146	SM378B R P12 930 PSD-E NB D100 G-TT PRO	IP20
911401527246	SM378B R P12 940 PSD-E NB D100 G-TT PRO	IP20
911401527346	SM378B R P12 927 PSD-E MB D100 G-TT PRO	IP20
911401527446	SM378B R P12 930 PSD-E MB D100 G-TT PRO	IP20
911401527546	SM378B R P12 940 PSD-E MB D100 G-TT PRO	IP20
911401527646	SM378B R P12 927 PSD-E WB D100 G-TT PRO	IP20
911401527746	SM378B R P12 930 PSD-E WB D100 G-TT PRO	IP20
911401527846	SM378B R P12 940 PSD-E WB D100 G-TT PRO	IP20
911401527946	SM378B R P14 927 PSD-E NB D100 G-TT PRO	IP20
911401528046	SM378B R P14 930 PSD-E NB D100 G-TT PRO	IP20
911401528146	SM378B R P14 940 PSD-E NB D100 G-TT PRO	IP20
911401528246	SM378B R P14 927 PSD-E MB D100 G-TT PRO	IP20
911401528346	SM378B R P14 930 PSD-E MB D100 G-TT PRO	IP20
911401528446	SM378B R P14 940 PSD-E MB D100 G-TT PRO	IP20
911401528546	SM378B R P14 927 PSD-E WB D100 G-TT PRO	IP20
911401528646	SM378B R P14 930 PSD-E WB D100 G-TT PRO	IP20
911401528746	SM378B R P14 940 PSD-E WB D100 G-TT PRO	IP20
911401528846	SM378X R P8 930 WIA MB D100 G-TT PRO	IP20
911401528946	SM378X R P8 930 WIA WB D100 G-TT PRO	IP20
911401529046	SM378X R P12 930 WIA MB D100 G-TT PRO	IP20
911401529146	SM378X R P12 930 WIA WB D100 G-TT PRO	IP20
911401529246	SM378X R P14 930 WIA MB D100 G-TT PRO	IP20
911401529346	SM378X R P14 930 WIA WB D100 G-TT PRO	IP20
911401529446	SM378X R P20 930 WIA MB D100 G-TT PRO	IP20
911401529546	SM378X R P20 930 WIA WB D100 G-TT PRO	IP20
911401529646	SM378B R P9 PSD-TNW NB D100 G-TT PRO	IP20
911401529746	SM378B R P9 PSD-TNW MB D100 G-TT PRO	IP20

Order Code	Full Product Name	Ingress protection code
911401529846	SM378B R P9 PSD-TNW WB D100 G-TT PRO	IP20
911401529946	SM378B R P12 PSD-TNW NB D100 G-TT PRO	IP20
911401530046	SM378B R P12 PSD-TNW MB D100 G-TT PRO	IP20
911401530146	SM378B R P12 PSD-TNW WB D100 G-TT PRO	IP20
911401530246	SM378B R P15 PSD-TNW NB D100 G-TT PRO	IP20
911401530346	SM378B R P15 PSD-TNW MB D100 G-TT PRO	IP20
911401530446	SM378B R P15 PSD-TNW WB D100 G-TT PRO	IP20
911401530546	SM378B R P22 PSD-TNW NB D100 G-TT PRO	IP20
911401530646	SM378B R P22 PSD-TNW MB D100 G-TT PRO	IP20
911401530746	SM378B R P22 PSD-TNW WB D100 G-TT PRO	IP20
911401500046	RS378B P7 930 PSD-E WB M43 PRO	IP20
911401500146	RS378B P7 940 PSD-E WB M43 PRO	IP20
911401500246	RS378B P6 930 PSU-E MB M43 WP PRO	IP20/54
911401500346	RS378B P6 930 PSU-E WB M43 WP PRO	IP20/54
911401500446	RS378B P8 930 PSU-E MB M43 WP PRO	IP20/54
911401500546	RS378B P8 930 PSU-E WB M43 WP PRO	IP20/54
911401520146	RS378B P7 PSD-TNW NB M43 PRO	IP20
911401520246	RS378B P7 PSD-TNW MB M43 PRO	IP20
911401520346	RS378B P7 PSD-TNW WB M43 PRO	IP20
911401596945	RS378B P6 927 PSU-E SNB M43 PRO	IP20
911401597045	RS378B P6 930 PSU-E SNB M43 PRO	IP20
911401597145	RS378B P6 940 PSU-E SNB M43 PRO	IP20
911401597245	RS378B P6 927 PSU-E NB M43 PRO	IP20
911401597345	RS378B P6 930 PSU-E NB M43 PRO	IP20
911401597445	RS378B P6 940 PSU-E NB M43 PRO	IP20
911401597545	RS378B P6 927 PSU-E MB M43 PRO	IP20
911401597645	RS378B P6 930 PSU-E MB M43 PRO	IP20
911401597745	RS378B P6 940 PSU-E MB M43 PRO	IP20
911401597845	RS378B P6 927 PSU-E WB M43 PRO	IP20
911401597945	RS378B P6 930 PSU-E WB M43 PRO	IP20
911401598045	RS378B P6 940 PSU-E WB M43 PRO	IP20
911401598145	RS378B P8 927 PSU-E NB M43 PRO	IP20
911401598245	RS378B P8 930 PSU-E NB M43 PRO	IP20
911401598345	RS378B P8 940 PSU-E NB M43 PRO	IP20
911401598445	RS378B P8 927 PSU-E MB M43 PRO	IP20
911401598545	RS378B P8 930 PSU-E MB M43 PRO	IP20
911401598645	RS378B P8 940 PSU-E MB M43 PRO	IP20
911401598745	RS378B P8 927 PSU-E WB M43 PRO	IP20
911401598845	RS378B P8 930 PSU-E WB M43 PRO	IP20
911401598945	RS378B P8 940 PSU-E WB M43 PRO	IP20
911401599045	RS378B P7 927 PSD-E SNB M43 PRO	IP20
911401599145	RS378B P7 930 PSD-E SNB M43 PRO	IP20
911401599245	RS378B P7 940 PSD-E SNB M43 PRO	IP20
911401599345	RS378B P7 927 PSD-E NB M43 PRO	IP20
911401599445	RS378B P7 930 PSD-E NB M43 PRO	IP20
911401599545	RS378B P7 940 PSD-E NB M43 PRO	IP20
911401599645	RS378B P7 927 PSD-E MB M43 PRO	IP20
911401599745	RS378B P7 930 PSD-E MB M43 PRO	IP20
911401599845	RS378B P7 940 PSD-E MB M43 PRO	IP20
911401599945	RS378B P7 927 PSD-E WB M43 PRO	IP20
911401500646	RS378B P7 927 PSU-E SNB M55 PRO	IP20

Order Code	Full Product Name	Ingress protection code
911401500746	RS378B P7 930 PSU-E SNB M55 PRO	IP20
911401500846	RS378B P7 940 PSU-E SNB M55 PRO	IP20
911401500946	RS378B P7 927 PSU-E NB M55 PRO	IP20
911401501046	RS378B P7 930 PSU-E NB M55 PRO	IP20
911401501146	RS378B P7 940 PSU-E NB M55 PRO	IP20
911401501246	RS378B P7 927 PSU-E MB M55 PRO	IP20
911401501346	RS378B P7 930 PSU-E MB M55 PRO	IP20
911401501446	RS378B P7 940 PSU-E MB M55 PRO	IP20
911401501546	RS378B P7 927 PSU-E WB M55 PRO	IP20
911401501646	RS378B P7 930 PSU-E WB M55 PRO	IP20
911401501746	RS378B P7 940 PSU-E WB M55 PRO	IP20
911401501846	RS378B P8 927 PSU-E SNB M55 PRO	IP20
911401501946	RS378B P8 930 PSU-E SNB M55 PRO	IP20
911401502046	RS378B P8 940 PSU-E SNB M55 PRO	IP20
911401502146	RS378B P9 927 PSU-E NB M55 PRO	IP20
911401502246	RS378B P9 930 PSU-E NB M55 PRO	IP20
911401502346	RS378B P9 940 PSU-E NB M55 PRO	IP20
911401502446	RS378B P9 927 PSU-E MB M55 PRO	IP20
911401502546	RS378B P9 930 PSU-E MB M55 PRO	IP20
911401502646	RS378B P9 940 PSU-E MB M55 PRO	IP20
911401502746	RS378B P9 927 PSU-E WB M55 PRO	IP20
911401502846	RS378B P9 930 PSU-E WB M55 PRO	IP20
911401502946	RS378B P9 940 PSU-E WB M55 PRO	IP20
911401504846	RS378B P7 927 PSD-E SNB M55 PRO	IP20
911401504946	RS378B P7 930 PSD-E SNB M55 PRO	IP20
911401505046	RS378B P7 940 PSD-E SNB M55 PRO	IP20
911401505146	RS378B P7 927 PSD-E NB M55 PRO	IP20
911401505246	RS378B P7 930 PSD-E NB M55 PRO	IP20
911401505346	RS378B P7 940 PSD-E NB M55 PRO	IP20
911401505446	RS378B P7 927 PSD-E MB M55 PRO	IP20
911401505546	RS378B P7 930 PSD-E MB M55 PRO	IP20
911401505646	RS378B P7 940 PSD-E MB M55 PRO	IP20
911401505746	RS378B P7 927 PSD-E WB M55 PRO	IP20
911401505846	RS378B P7 930 PSD-E WB M55 PRO	IP20
911401505946	RS378B P7 940 PSD-E WB M55 PRO	IP20
911401506046	RS378B P9 927 PSD-E NB M55 PRO	IP20
911401506146	RS378B P9 930 PSD-E NB M55 PRO	IP20
911401506246	RS378B P9 940 PSD-E NB M55 PRO	IP20
911401506346	RS378B P9 927 PSD-E MB M55 PRO	IP20
911401506446	RS378B P9 930 PSD-E MB M55 PRO	IP20
911401506546	RS378B P9 940 PSD-E MB M55 PRO	IP20
911401506646	RS378B P9 927 PSD-E WB M55 PRO	IP20
911401506746	RS378B P9 930 PSD-E WB M55 PRO	IP20
911401506846	RS378B P9 940 PSD-E WB M55 PRO	IP20
911401508746	RS378X P9 930 WIA MB M55 PRO	IP20
911401508846	RS378X P9 930 WIA WB M55 PRO	IP20
911401509346	RS378B P7 930 PSU-E MB M55 WP PRO	IP20/54
911401509446	RS378B P7 930 PSU-E WB M55 WP PRO	IP20/54
911401509546	RS378B P9 930 PSU-E MB M55 WP PRO	IP20/54
911401509646	RS378B P9 930 PSU-E WB M55 WP PRO	IP20/54
911401518946	RS378B P7 PSD-TNW NB M55 PRO	IP20

Order Code	Full Product Name	Ingress protection code
911401519046	RS378B P7 PSD-TNW MB M55 PRO	IP20
911401519146	RS378B P7 PSD-TNW WB M55 PRO	IP20
911401519246	RS378B P9 PSD-TNW NB M55 PRO	IP20
911401519346	RS378B P9 PSD-TNW MB M55 PRO	IP20
911401519446	RS378B P9 PSD-TNW WB M55 PRO	IP20
911401595145	RS378B P3 927 PSU-E MB D35 G-TT PRO	IP20
911401595245	RS378B P3 930 PSU-E MB D35 G-TT PRO	IP20
911401595345	RS378B P3 940 PSU-E MB D35 G-TT PRO	IP20
911401595445	RS378B P3 927 PSU-E WB D35 G-TT PRO	IP20
911401595545	RS378B P3 930 PSU-E WB D35 G-TT PRO	IP20
911401595645	RS378B P3 940 PSU-E WB D35 G-TT PRO	IP20
911401595745	RS378B P5 927 PSU-E MB D35 G-TT PRO	IP20
911401595845	RS378B P5 930 PSU-E MB D35 G-TT PRO	IP20
911401595945	RS378B P5 940 PSU-E MB D35 G-TT PRO	IP20
911401596045	RS378B P5 927 PSU-E WB D35 G-TT PRO	IP20
911401596145	RS378B P5 930 PSU-E WB D35 G-TT PRO	IP20
911401596245	RS378B P5 940 PSU-E WB D35 G-TT PRO	IP20
911401596345	RS378B P5 927 PSD-E MB D35 G-TT PRO	IP20
911401596445	RS378B P5 930 PSD-E MB D35 G-TT PRO	IP20
911401596545	RS378B P5 940 PSD-E MB D35 G-TT PRO	IP20
911401596645	RS378B P5 927 PSD-E WB D35 G-TT PRO	IP20
911401596745	RS378B P5 930 PSD-E WB D35 G-TT PRO	IP20
911401596845	RS378B P5 940 PSD-E WB D35 G-TT PRO	IP20
911401510146	RS378B P12 927 PSU-E NB M70 PRO	IP20
911401510246	RS378B P12 930 PSU-E NB M70 PRO	IP20
911401510346	RS378B P12 940 PSU-E NB M70 PRO	IP20
911401510446	RS378B P12 927 PSU-E MB M70 PRO	IP20
911401510546	RS378B P12 930 PSU-E MB M70 PRO	IP20
911401510646	RS378B P12 940 PSU-E MB M70 PRO	IP20
911401510746	RS378B P12 927 PSU-E WB M70 PRO	IP20
911401510846	RS378B P12 930 PSU-E WB M70 PRO	IP20
911401510946	RS378B P12 940 PSU-E WB M70 PRO	IP20
911401511046	RS378B P17 927 PSU-E NB M70 PRO	IP20
911401511146	RS378B P17 930 PSU-E NB M70 PRO	IP20
911401511246	RS378B P17 940 PSU-E NB M70 PRO	IP20
911401511346	RS378B P17 927 PSU-E MB M70 PRO	IP20
911401511446	RS378B P17 930 PSU-E MB M70 PRO	IP20
911401511546	RS378B P17 940 PSU-E MB M70 PRO	IP20
911401511646	RS378B P17 927 PSU-E WB M70 PRO	IP20
911401511746	RS378B P17 930 PSU-E WB M70 PRO	IP20
911401511846	RS378B P17 940 PSU-E WB M70 PRO	IP20
911401511946	RS378B P19 927 PSU-E NB M70 PRO	IP20
911401512046	RS378B P19 930 PSU-E NB M70 PRO	IP20
911401512146	RS378B P19 940 PSU-E NB M70 PRO	IP20
911401512246	RS378B P19 927 PSU-E MB M70 PRO	IP20
911401512346	RS378B P19 930 PSU-E MB M70 PRO	IP20
911401512446	RS378B P19 940 PSU-E MB M70 PRO	IP20
911401512546	RS378B P19 927 PSU-E WB M70 PRO	IP20
911401512646	RS378B P19 930 PSU-E WB M70 PRO	IP20
911401512746	RS378B P19 940 PSU-E WB M70 PRO	IP20
911401513746	RS378B P12 927 PSD-E NB M70 PRO	IP20

Order Code	Full Product Name	Ingress protection code
911401513846	RS378B P12 930 PSD-E NB M70 PRO	IP20
911401513946	RS378B P12 940 PSD-E NB M70 PRO	IP20
911401514046	RS378B P12 927 PSD-E MB M70 PRO	IP20
911401514146	RS378B P12 930 PSD-E MB M70 PRO	IP20
911401514246	RS378B P12 940 PSD-E MB M70 PRO	IP20
911401514346	RS378B P12 927 PSD-E WB M70 PRO	IP20
911401514446	RS378B P12 930 PSD-E WB M70 PRO	IP20
911401514546	RS378B P12 940 PSD-E WB M70 PRO	IP20
911401514646	RS378B P18 927 PSD-E NB M70 PRO	IP20
911401514746	RS378B P18 930 PSD-E NB M70 PRO	IP20
911401514846	RS378B P18 940 PSD-E NB M70 PRO	IP20
911401514946	RS378B P18 927 PSD-E MB M70 PRO	IP20
911401515046	RS378B P18 930 PSD-E MB M70 PRO	IP20
911401515146	RS378B P18 940 PSD-E MB M70 PRO	IP20
911401515246	RS378B P18 927 PSD-E WB M70 PRO	IP20
911401515346	RS378B P18 930 PSD-E WB M70 PRO	IP20
911401515446	RS378B P18 940 PSD-E WB M70 PRO	IP20
911401515546	RS378B P20 927 PSD-E NB M70 PRO	IP20
911401515646	RS378B P20 930 PSD-E NB M70 PRO	IP20
911401515746	RS378B P20 940 PSD-E NB M70 PRO	IP20
911401515846	RS378B P20 927 PSD-E MB M70 PRO	IP20
911401515946	RS378B P20 930 PSD-E MB M70 PRO	IP20
911401516046	RS378B P20 940 PSD-E MB M70 PRO	IP20
911401516146	RS378B P20 927 PSD-E WB M70 PRO	IP20
911401516246	RS378B P20 930 PSD-E WB M70 PRO	IP20
911401516346	RS378B P20 940 PSD-E WB M70 PRO	IP20
911401517346	RS378X P12 930 WIA MB M70 PRO	IP20
911401517446	RS378X P12 930 WIA WB M70 PRO	IP20
911401517546	RS378X P19 930 WIA MB M70 PRO	IP20
911401517646	RS378X P19 930 WIA WB M70 PRO	IP20
911401517746	RS378X P18 930 WIA MB M70 PRO	IP20
911401517846	RS378X P18 930 WIA WB M70 PRO	IP20
911401518146	RS378B P12 930 PSU-E MB M70 WP PRO	IP20/54
911401518246	RS378B P12 930 PSU-E WB M70 WP PRO	IP20/54
911401518346	RS378B P17 930 PSU-E MB M70 WP PRO	IP20/54
911401518446	RS378B P17 930 PSU-E WB M70 WP PRO	IP20/54
911401518546	RS378B P19 930 PSU-E MB M70 WP PRO	IP20/54
911401518646	RS378B P19 930 PSU-E WB M70 WP PRO	IP20/54
911401520446	RS378B P13 PSD-TNW NB M70 PRO	IP20
911401520546	RS378B P13 PSD-TNW MB M70 PRO	IP20
911401520646	RS378B P13 PSD-TNW WB M70 PRO	IP20
911401520746	RS378B P19 PSD-TNW NB M70 PRO	IP20
911401520846	RS378B P19 PSD-TNW MB M70 PRO	IP20
911401520946	RS378B P19 PSD-TNW WB M70 PRO	IP20
911401521046	RS378B P22 PSD-TNW NB M70 PRO	IP20
911401521146	RS378B P22 PSD-TNW MB M70 PRO	IP20
911401521246	RS378B P22 PSD-TNW WB M70 PRO	IP20
911401512846	RS378B P27 927 PSU-E NB M70 PRO	IP20
911401512946	RS378B P27 930 PSU-E NB M70 PRO	IP20
911401513046	RS378B P27 940 PSU-E NB M70 PRO	IP20
911401513146	RS378B P27 927 PSU-E MB M70 PRO	IP20

Order Code	Full Product Name	Ingress protection code
911401513246	RS378B P27 930 PSU-E MB M70 PRO	IP20
911401513346	RS378B P27 940 PSU-E MB M70 PRO	IP20
911401513446	RS378B P27 927 PSU-E WB M70 PRO	IP20
911401513546	RS378B P27 930 PSU-E WB M70 PRO	IP20
911401513646	RS378B P27 940 PSU-E WB M70 PRO	IP20
911401516446	RS378B P27 927 PSD-E NB M70 PRO	IP20
911401516546	RS378B P27 930 PSD-E NB M70 PRO	IP20
911401516646	RS378B P27 940 PSD-E NB M70 PRO	IP20
911401516746	RS378B P27 927 PSD-E MB M70 PRO	IP20
911401516846	RS378B P27 930 PSD-E MB M70 PRO	IP20
911401516946	RS378B P27 940 PSD-E MB M70 PRO	IP20
911401517046	RS378B P27 927 PSD-E WB M70 PRO	IP20
911401517146	RS378B P27 930 PSD-E WB M70 PRO	IP20
911401517246	RS378B P27 940 PSD-E WB M70 PRO	IP20
911401517946	RS378X P28 930 WIA MB M70 PRO	IP20
911401518046	RS378X P28 930 WIA WB M70 PRO	IP20
911401518746	RS378B P27 930 PSU-E MB M70 WP PRO	IP20/54
911401518846	RS378B P27 930 PSU-E WB M70 WP PRO	IP20/54
911401521346	RS378B P29 PSD-TNW NB M70 PRO	IP20
911401521446	RS378B P29 PSD-TNW MB M70 PRO	IP20
911401521546	RS378B P29 PSD-TNW WB M70 PRO	IP20
911401530846	SM378B S P8 927 PSU-E NB D100 G-TT PRO	IP20
911401530946	SM378B S P8 930 PSU-E NB D100 G-TT PRO	IP20
911401531046	SM378B S P8 940 PSU-E NB D100 G-TT PRO	IP20
911401531146	SM378B S P8 927 PSU-E MB D100 G-TT PRO	IP20
911401531246	SM378B S P8 930 PSU-E MB D100 G-TT PRO	IP20
911401531346	SM378B S P8 940 PSU-E MB D100 G-TT PRO	IP20
911401531446	SM378B S P8 927 PSU-E WB D100 G-TT PRO	IP20
911401531546	SM378B S P8 930 PSU-E WB D100 G-TT PRO	IP20
911401531646	SM378B S P8 940 PSU-E WB D100 G-TT PRO	IP20
911401531746	SM378B S P11 927 PSU-E NB D100 G-TT PRO	IP20
911401531846	SM378B S P11 930 PSU-E NB D100 G-TT PRO	IP20
911401531946	SM378B S P11 940 PSU-E NB D100 G-TT PRO	IP20
911401532046	SM378B S P11 927 PSU-E MB D100 G-TT PRO	IP20
911401532146	SM378B S P11 930 PSU-E MB D100 G-TT PRO	IP20
911401532246	SM378B S P11 940 PSU-E MB D100 G-TT PRO	IP20
911401532346	SM378B S P11 927 PSU-E WB D100 G-TT PRO	IP20
911401532446	SM378B S P11 930 PSU-E WB D100 G-TT PRO	IP20
911401532546	SM378B S P11 940 PSU-E WB D100 G-TT PRO	IP20
911401532646	SM378B S P13 927 PSU-E NB D100 G-TT PRO	IP20
911401532746	SM378B S P13 930 PSU-E NB D100 G-TT PRO	IP20
911401532846	SM378B S P13 940 PSU-E NB D100 G-TT PRO	IP20
911401532946	SM378B S P13 927 PSU-E MB D100 G-TT PRO	IP20
911401533046	SM378B S P13 930 PSU-E MB D100 G-TT PRO	IP20
911401533146	SM378B S P13 940 PSU-E MB D100 G-TT PRO	IP20
911401533246	SM378B S P13 927 PSU-E WB D100 G-TT PRO	IP20
911401533346	SM378B S P13 930 PSU-E WB D100 G-TT PRO	IP20
911401533446	SM378B S P13 940 PSU-E WB D100 G-TT PRO	IP20
911401533546	SM378B S P20 927 PSU-E NB D100 G-TT PRO	IP20
911401533646	SM378B S P20 930 PSU-E NB D100 G-TT PRO	IP20
911401533746	SM378B S P20 940 PSU-E NB D100 G-TT PRO	IP20
911401533846	SM378B S P20 927 PSU-E MB D100 G-TT PRO	IP20
911401533946	SM378B S P20 930 PSU-E MB D100 G-TT PRO	IP20
911401534046	SM378B S P20 940 PSU-E MB D100 G-TT PRO	IP20
911401534146	SM378B S P20 927 PSU-E WB D100 G-TT PRO	IP20
911401534246	SM378B S P20 930 PSU-E WB D100 G-TT PRO	IP20
911401534346	SM378B S P20 940 PSU-E WB D100 G-TT PRO	IP20
911401534446	SM378B S P20 927 PSD-E NB D100 G-TT PRO	IP20
911401534546	SM378B S P20 930 PSD-E NB D100 G-TT PRO	IP20
911401534646	SM378B S P20 940 PSD-E NB D100 G-TT PRO	IP20
911401534746	SM378B S P20 927 PSD-E MB D100 G-TT PRO	IP20
911401534846	SM378B S P20 930 PSD-E MB D100 G-TT PRO	IP20
911401534946	SM378B S P20 940 PSD-E MB D100 G-TT PRO	IP20
911401535046	SM378B S P20 927 PSD-E WB D100 G-TT PRO	IP20
911401535146	SM378B S P20 930 PSD-E WB D100 G-TT PRO	IP20
911401535246	SM378B S P20 940 PSD-E WB D100 G-TT PRO	IP20
911401535446	SM378B S P8 927 PSD-E NB D100 G-TT PRO	IP20
911401535546	SM378B S P8 930 PSD-E NB D100 G-TT PRO	IP20
911401535646	SM378B S P8 940 PSD-E NB D100 G-TT PRO	IP20
911401535746	SM378B S P8 927 PSD-E MB D100 G-TT PRO	IP20
911401535846	SM378B S P8 930 PSD-E MB D100 G-TT PRO	IP20
911401535946	SM378B S P8 940 PSD-E MB D100 G-TT PRO	IP20
911401536046	SM378B S P8 927 PSD-E WB D100 G-TT PRO	IP20
911401536146	SM378B S P8 930 PSD-E WB D100 G-TT PRO	IP20
911401536246	SM378B S P8 940 PSD-E WB D100 G-TT PRO	IP20
911401536346	SM378B S P12 927 PSD-E NB D100 G-TT PRO	IP20
911401536446	SM378B S P12 930 PSD-E NB D100 G-TT PRO	IP20
911401536546	SM378B S P12 940 PSD-E NB D100 G-TT PRO	IP20
911401536646	SM378B S P12 927 PSD-E MB D100 G-TT PRO	IP20
911401536746	SM378B S P12 930 PSD-E MB D100 G-TT PRO	IP20
911401536846	SM378B S P12 940 PSD-E MB D100 G-TT PRO	IP20
911401536946	SM378B S P12 927 PSD-E WB D100 G-TT PRO	IP20
911401537046	SM378B S P12 930 PSD-E WB D100 G-TT PRO	IP20
911401537146	SM378B S P12 940 PSD-E WB D100 G-TT PRO	IP20
911401537246	SM378B S P14 927 PSD-E NB D100 G-TT PRO	IP20
911401537346	SM378B S P14 930 PSD-E NB D100 G-TT PRO	IP20
911401537446	SM378B S P14 940 PSD-E NB D100 G-TT PRO	IP20
911401537546	SM378B S P14 927 PSD-E MB D100 G-TT PRO	IP20
911401537646	SM378B S P14 930 PSD-E MB D100 G-TT PRO	IP20
911401537746	SM378B S P14 940 PSD-E MB D100 G-TT PRO	IP20
911401537846	SM378B S P14 927 PSD-E WB D100 G-TT PRO	IP20
911401537946	SM378B S P14 930 PSD-E WB D100 G-TT PRO	IP20
911401538046	SM378B S P14 940 PSD-E WB D100 G-TT PRO	IP20
911401538146	SM378X S P8 930 WIA MB D100 G-TT PRO	IP20
911401538246	SM378X S P8 930 WIA WB D100 G-TT PRO	IP20
911401538346	SM378X S P12 930 WIA MB D100 G-TT PRO	IP20
911401538446	SM378X S P12 930 WIA WB D100 G-TT PRO	IP20
911401538546	SM378X S P14 930 WIA MB D100 G-TT PRO	IP20
911401538646	SM378X S P14 930 WIA WB D100 G-TT PRO	IP20
911401538746	SM378X S P20 930 WIA MB D100 G-TT PRO	IP20
911401538846	SM378X S P20 930 WIA WB D100 G-TT PRO	IP20
911401538946	SM378B S P9 PSD-TNW NB D100 G-TT PRO	IP20

Order Code	Full Product Name	Ingress protection code
911401539046	SM378B S P9 PSD-TNW MB D100 G-TT PRO	IP20
911401539146	SM378B S P9 PSD-TNW WB D100 G-TT PRO	IP20
911401539246	SM378B S P12 PSD-TNW NB D100 G-TT PRO	IP20
911401539346	SM378B S P12 PSD-TNW MB D100 G-TT PRO	IP20
911401539446	SM378B S P12 PSD-TNW WB D100 G-TT PRO	IP20
911401539546	SM378B S P15 PSD-TNW NB D100 G-TT PRO	IP20
911401539646	SM378B S P15 PSD-TNW MB D100 G-TT PRO	IP20
911401539746	SM378B S P15 PSD-TNW WB D100 G-TT PRO	IP20
911401539846	SM378B S P22 PSD-TNW NB D100 G-TT PRO	IP20
911401539946	SM378B S P22 PSD-TNW MB D100 G-TT PRO	IP20
911401540046	SM378B S P22 PSD-TNW WB D100 G-TT PRO	IP20
911401503046	RS378B P12 927 PSU-E NB M55 PRO	IP20
911401503146	RS378B P12 930 PSU-E NB M55 PRO	IP20
911401503246	RS378B P12 940 PSU-E NB M55 PRO	IP20
911401503346	RS378B P12 927 PSU-E MB M55 PRO	IP20
911401503446	RS378B P12 930 PSU-E MB M55 PRO	IP20
911401503546	RS378B P12 940 PSU-E MB M55 PRO	IP20
911401503646	RS378B P12 927 PSU-E WB M55 PRO	IP20
911401503746	RS378B P12 930 PSU-E WB M55 PRO	IP20
911401503846	RS378B P12 940 PSU-E WB M55 PRO	IP20
911401503946	RS378B P14 927 PSU-E NB M55 PRO	IP20
911401504046	RS378B P14 930 PSU-E NB M55 PRO	IP20
911401504146	RS378B P14 940 PSU-E NB M55 PRO	IP20
911401504246	RS378B P14 927 PSU-E MB M55 PRO	IP20
911401504346	RS378B P14 930 PSU-E MB M55 PRO	IP20
911401504446	RS378B P14 940 PSU-E MB M55 PRO	IP20
911401504546	RS378B P14 927 PSU-E WB M55 PRO	IP20
911401504646	RS378B P14 930 PSU-E WB M55 PRO	IP20
911401504746	RS378B P14 940 PSU-E WB M55 PRO	IP20
911401506946	RS378B P13 927 PSD-E NB M55 PRO	IP20
911401507046	RS378B P13 930 PSD-E NB M55 PRO	IP20

Order Code	Full Product Name	Ingress protection code
911401507146	RS378B P13 940 PSD-E NB M55 PRO	IP20
911401507246	RS378B P13 927 PSD-E MB M55 PRO	IP20
911401507346	RS378B P13 930 PSD-E MB M55 PRO	IP20
911401507446	RS378B P13 940 PSD-E MB M55 PRO	IP20
911401507546	RS378B P13 927 PSD-E WB M55 PRO	IP20
911401507646	RS378B P13 930 PSD-E WB M55 PRO	IP20
911401507746	RS378B P13 940 PSD-E WB M55 PRO	IP20
911401507846	RS378B P15 927 PSD-E NB M55 PRO	IP20
911401507946	RS378B P15 930 PSD-E NB M55 PRO	IP20
911401508046	RS378B P15 940 PSD-E NB M55 PRO	IP20
911401508146	RS378B P15 927 PSD-E MB M55 PRO	IP20
911401508246	RS378B P15 930 PSD-E MB M55 PRO	IP20
911401508346	RS378B P15 940 PSD-E MB M55 PRO	IP20
911401508446	RS378B P15 927 PSD-E WB M55 PRO	IP20
911401508546	RS378B P15 930 PSD-E WB M55 PRO	IP20
911401508646	RS378B P15 940 PSD-E WB M55 PRO	IP20
911401508946	RS378X P12 930 WIA MB M55 PRO	IP20
911401509046	RS378X P12 930 WIA WB M55 PRO	IP20
911401509146	RS378X P14 930 WIA MB M55 PRO	IP20
911401509246	RS378X P14 930 WIA WB M55 PRO	IP20
911401509746	RS378B P12 930 PSU-E MB M55 WP PRO	IP20/54
911401509846	RS378B P12 930 PSU-E WB M55 WP PRO	IP20/54
911401509946	RS378B P14 930 PSU-E MB M55 WP PRO	IP20/54
911401510046	RS378B P14 930 PSU-E WB M55 WP PRO	IP20/54
911401519546	RS378B P13 PSD-TNW NB M55 PRO	IP20
911401519646	RS378B P13 PSD-TNW MB M55 PRO	IP20
911401519746	RS378B P13 PSD-TNW WB M55 PRO	IP20
911401519846	RS378B P15 PSD-TNW NB M55 PRO	IP20
911401519946	RS378B P15 PSD-TNW MB M55 PRO	IP20
911401520046	RS378B P15 PSD-TNW WB M55 PRO	IP20

Approval and Application

Order Code	Full Product Name	CE mark
911401521646	SM378B R P8 927 PSU-E NB D100 G-TT PRO	Yes
911401521746	SM378B R P8 930 PSU-E NB D100 G-TT PRO	Yes
911401521846	SM378B R P8 940 PSU-E NB D100 G-TT PRO	Yes
911401521946	SM378B R P8 927 PSU-E MB D100 G-TT PRO	Yes
911401522046	SM378B R P8 930 PSU-E MB D100 G-TT PRO	Yes
911401522146	SM378B R P8 940 PSU-E MB D100 G-TT PRO	Yes
911401522246	SM378B R P8 927 PSU-E WB D100 G-TT PRO	Yes
911401522346	SM378B R P8 930 PSU-E WB D100 G-TT PRO	Yes
911401522446	SM378B R P8 940 PSU-E WB D100 G-TT PRO	Yes
911401522546	SM378B R P11 927 PSU-E NB D100 G-TT PRO	Yes
911401522646	SM378B R P11 930 PSU-E NB D100 G-TT PRO	Yes
911401522746	SM378B R P11 940 PSU-E NB D100 G-TT PRO	Yes
911401522846	SM378B R P11 927 PSU-E MB D100 G-TT PRO	Yes
911401522946	SM378B R P11 930 PSU-E MB D100 G-TT PRO	Yes
911401523046	SM378B R P11 940 PSU-E MB D100 G-TT PRO	Yes
911401523146	SM378B R P11 927 PSU-E WB D100 G-TT PRO	Yes

Order Code	Full Product Name	CE mark
911401523246	SM378B R P11 930 PSU-E WB D100 G-TT PRO	Yes
911401523346	SM378B R P11 940 PSU-E WB D100 G-TT PRO	Yes
911401523446	SM378B R P13 927 PSU-E NB D100 G-TT PRO	Yes
911401523546	SM378B R P13 930 PSU-E NB D100 G-TT PRO	Yes
911401523646	SM378B R P13 940 PSU-E NB D100 G-TT PRO	Yes
911401523746	SM378B R P13 927 PSU-E MB D100 G-TT PRO	Yes
911401523846	SM378B R P13 930 PSU-E MB D100 G-TT PRO	Yes
911401523946	SM378B R P13 940 PSU-E MB D100 G-TT PRO	Yes
911401524046	SM378B R P13 927 PSU-E WB D100 G-TT PRO	Yes
911401524146	SM378B R P13 930 PSU-E WB D100 G-TT PRO	Yes
911401524246	SM378B R P13 940 PSU-E WB D100 G-TT PRO	Yes
911401524346	SM378B R P20 927 PSU-E NB D100 G-TT PRO	Yes
911401524446	SM378B R P20 930 PSU-E NB D100 G-TT PRO	Yes
911401524546	SM378B R P20 940 PSU-E NB D100 G-TT PRO	Yes
911401524646	SM378B R P20 927 PSU-E MB D100 G-TT PRO	Yes
911401524746	SM378B R P20 930 PSU-E MB D100 G-TT PRO	Yes

Order Code	Full Product Name	CE mark
911401524846	SM378B R P20 940 PSU-E MB D100 G-TT PRO	Yes
911401524946	SM378B R P20 927 PSU-E WB D100 G-TT PRO	Yes
911401525046	SM378B R P20 930 PSU-E WB D100 G-TT PRO	Yes
911401525146	SM378B R P20 940 PSU-E WB D100 G-TT PRO	Yes
911401525246	SM378B R P20 927 PSD-E NB D100 G-TT PRO	Yes
911401525346	SM378B R P20 930 PSD-E NB D100 G-TT PRO	Yes
911401525446	SM378B R P20 940 PSD-E NB D100 G-TT PRO	Yes
911401525546	SM378B R P20 927 PSD-E MB D100 G-TT PRO	Yes
911401525646	SM378B R P20 930 PSD-E MB D100 G-TT PRO	Yes
911401525746	SM378B R P20 940 PSD-E MB D100 G-TT PRO	Yes
911401525846	SM378B R P20 927 PSD-E WB D100 G-TT PRO	Yes
911401525946	SM378B R P20 930 PSD-E WB D100 G-TT PRO	Yes
911401526046	SM378B R P20 940 PSD-E WB D100 G-TT PRO	Yes
911401526146	SM378B R P8 927 PSD-E NB D100 G-TT PRO	Yes
911401526246	SM378B R P8 930 PSD-E NB D100 G-TT PRO	Yes
911401526346	SM378B R P8 940 PSD-E NB D100 G-TT PRO	Yes
911401526446	SM378B R P8 927 PSD-E MB D100 G-TT PRO	Yes
911401526546	SM378B R P8 930 PSD-E MB D100 G-TT PRO	Yes
911401526646	SM378B R P8 940 PSD-E MB D100 G-TT PRO	Yes
911401526746	SM378B R P8 927 PSD-E WB D100 G-TT PRO	Yes
911401526846	SM378B R P8 930 PSD-E WB D100 G-TT PRO	Yes
911401526946	SM378B R P8 940 PSD-E WB D100 G-TT PRO	Yes
911401527046	SM378B R P12 927 PSD-E NB D100 G-TT PRO	Yes
911401527146	SM378B R P12 930 PSD-E NB D100 G-TT PRO	Yes
911401527246	SM378B R P12 940 PSD-E NB D100 G-TT PRO	Yes
911401527346	SM378B R P12 927 PSD-E MB D100 G-TT PRO	Yes
911401527446	SM378B R P12 930 PSD-E MB D100 G-TT PRO	Yes
911401527546	SM378B R P12 940 PSD-E MB D100 G-TT PRO	Yes
911401527646	SM378B R P12 927 PSD-E WB D100 G-TT PRO	Yes
911401527746	SM378B R P12 930 PSD-E WB D100 G-TT PRO	Yes
911401527846	SM378B R P12 940 PSD-E WB D100 G-TT PRO	Yes
911401527946	SM378B R P14 927 PSD-E NB D100 G-TT PRO	Yes
911401528046	SM378B R P14 930 PSD-E NB D100 G-TT PRO	Yes
911401528146	SM378B R P14 940 PSD-E NB D100 G-TT PRO	Yes
911401528246	SM378B R P14 927 PSD-E MB D100 G-TT PRO	Yes
911401528346	SM378B R P14 930 PSD-E MB D100 G-TT PRO	Yes
911401528446	SM378B R P14 940 PSD-E MB D100 G-TT PRO	Yes
911401528546	SM378B R P14 927 PSD-E WB D100 G-TT PRO	Yes
911401528646	SM378B R P14 930 PSD-E WB D100 G-TT PRO	Yes
911401528746	SM378B R P14 940 PSD-E WB D100 G-TT PRO	Yes
911401528846	SM378X R P8 930 WIA MB D100 G-TT PRO	Yes
911401528946	SM378X R P8 930 WIA WB D100 G-TT PRO	Yes
911401529046	SM378X R P12 930 WIA MB D100 G-TT PRO	Yes
911401529146	SM378X R P12 930 WIA WB D100 G-TT PRO	Yes
911401529246	SM378X R P14 930 WIA MB D100 G-TT PRO	Yes
911401529346	SM378X R P14 930 WIA WB D100 G-TT PRO	Yes
911401529446	SM378X R P20 930 WIA MB D100 G-TT PRO	Yes
911401529546	SM378X R P20 930 WIA WB D100 G-TT PRO	Yes
911401529646	SM378B R P9 PSD-TNW NB D100 G-TT PRO	No
911401529746	SM378B R P9 PSD-TNW MB D100 G-TT PRO	No
911401529846	SM378B R P9 PSD-TNW WB D100 G-TT PRO	No
911401529946	SM378B R P12 PSD-TNW NB D100 G-TT PRO	No

Order Code	Full Product Name	CE mark
911401530046	SM378B R P12 PSD-TNW MB D100 G-TT PRO	No
911401530146	SM378B R P12 PSD-TNW WB D100 G-TT PRO	No
911401530246	SM378B R P15 PSD-TNW NB D100 G-TT PRO	No
911401530346	SM378B R P15 PSD-TNW MB D100 G-TT PRO	No
911401530446	SM378B R P15 PSD-TNW WB D100 G-TT PRO	No
911401530546	SM378B R P22 PSD-TNW NB D100 G-TT PRO	No
911401530646	SM378B R P22 PSD-TNW MB D100 G-TT PRO	No
911401530746	SM378B R P22 PSD-TNW WB D100 G-TT PRO	No
911401500046	RS378B P7 930 PSD-E WB M43 PRO	Yes
911401500146	RS378B P7 940 PSD-E WB M43 PRO	Yes
911401500246	RS378B P6 930 PSU-E MB M43 WP PRO	Yes
911401500346	RS378B P6 930 PSU-E WB M43 WP PRO	Yes
911401500446	RS378B P8 930 PSU-E MB M43 WP PRO	Yes
911401500546	RS378B P8 930 PSU-E WB M43 WP PRO	Yes
911401520146	RS378B P7 PSD-TNW NB M43 PRO	No
911401520246	RS378B P7 PSD-TNW MB M43 PRO	No
911401520346	RS378B P7 PSD-TNW WB M43 PRO	No
911401596945	RS378B P6 927 PSU-E SNB M43 PRO	Yes
911401597045	RS378B P6 930 PSU-E SNB M43 PRO	Yes
911401597145	RS378B P6 940 PSU-E SNB M43 PRO	Yes
911401597245	RS378B P6 927 PSU-E NB M43 PRO	Yes
911401597345	RS378B P6 930 PSU-E NB M43 PRO	Yes
911401597445	RS378B P6 940 PSU-E NB M43 PRO	Yes
911401597545	RS378B P6 927 PSU-E MB M43 PRO	Yes
911401597645	RS378B P6 930 PSU-E MB M43 PRO	Yes
911401597745	RS378B P6 940 PSU-E MB M43 PRO	Yes
911401597845	RS378B P6 927 PSU-E WB M43 PRO	Yes
911401597945	RS378B P6 930 PSU-E WB M43 PRO	Yes
911401598045	RS378B P6 940 PSU-E WB M43 PRO	Yes
911401598145	RS378B P8 927 PSU-E NB M43 PRO	Yes
911401598245	RS378B P8 930 PSU-E NB M43 PRO	Yes
911401598345	RS378B P8 940 PSU-E NB M43 PRO	Yes
911401598445	RS378B P8 927 PSU-E MB M43 PRO	Yes
911401598545	RS378B P8 930 PSU-E MB M43 PRO	Yes
911401598645	RS378B P8 940 PSU-E MB M43 PRO	Yes
911401598745	RS378B P8 927 PSU-E WB M43 PRO	Yes
911401598845	RS378B P8 930 PSU-E WB M43 PRO	Yes
911401598945	RS378B P8 940 PSU-E WB M43 PRO	Yes
911401599045	RS378B P7 927 PSD-E SNB M43 PRO	Yes
911401599145	RS378B P7 930 PSD-E SNB M43 PRO	Yes
911401599245	RS378B P7 940 PSD-E SNB M43 PRO	Yes
911401599345	RS378B P7 927 PSD-E NB M43 PRO	Yes
911401599445	RS378B P7 930 PSD-E NB M43 PRO	Yes
911401599545	RS378B P7 940 PSD-E NB M43 PRO	Yes
911401599645	RS378B P7 927 PSD-E MB M43 PRO	Yes
911401599745	RS378B P7 930 PSD-E MB M43 PRO	Yes
911401599845	RS378B P7 940 PSD-E MB M43 PRO	Yes
911401599945	RS378B P7 927 PSD-E WB M43 PRO	Yes
911401500646	RS378B P7 927 PSU-E SNB M55 PRO	Yes
911401500746	RS378B P7 930 PSU-E SNB M55 PRO	Yes
911401500846	RS378B P7 940 PSU-E SNB M55 PRO	Yes
911401500946	RS378B P7 927 PSU-E NB M55 PRO	Yes

Order Code	Full Product Name	CE mark
911401501046	RS378B P7 930 PSU-E NB M55 PRO	Yes
911401501146	RS378B P7 940 PSU-E NB M55 PRO	Yes
911401501246	RS378B P7 927 PSU-E MB M55 PRO	Yes
911401501346	RS378B P7 930 PSU-E MB M55 PRO	Yes
911401501446	RS378B P7 940 PSU-E MB M55 PRO	Yes
911401501546	RS378B P7 927 PSU-E WB M55 PRO	Yes
911401501646	RS378B P7 930 PSU-E WB M55 PRO	Yes
911401501746	RS378B P7 940 PSU-E WB M55 PRO	Yes
911401501846	RS378B P8 927 PSU-E SNB M55 PRO	Yes
911401501946	RS378B P8 930 PSU-E SNB M55 PRO	Yes
911401502046	RS378B P8 940 PSU-E SNB M55 PRO	Yes
911401502146	RS378B P9 927 PSU-E NB M55 PRO	Yes
911401502246	RS378B P9 930 PSU-E NB M55 PRO	Yes
911401502346	RS378B P9 940 PSU-E NB M55 PRO	Yes
911401502446	RS378B P9 927 PSU-E MB M55 PRO	Yes
911401502546	RS378B P9 930 PSU-E MB M55 PRO	Yes
911401502646	RS378B P9 940 PSU-E MB M55 PRO	Yes
911401502746	RS378B P9 927 PSU-E WB M55 PRO	Yes
911401502846	RS378B P9 930 PSU-E WB M55 PRO	Yes
911401502946	RS378B P9 940 PSU-E WB M55 PRO	Yes
911401504846	RS378B P7 927 PSD-E SNB M55 PRO	Yes
911401504946	RS378B P7 930 PSD-E SNB M55 PRO	Yes
911401505046	RS378B P7 940 PSD-E SNB M55 PRO	Yes
911401505146	RS378B P7 927 PSD-E NB M55 PRO	Yes
911401505246	RS378B P7 930 PSD-E NB M55 PRO	Yes
911401505346	RS378B P7 940 PSD-E NB M55 PRO	Yes
911401505446	RS378B P7 927 PSD-E MB M55 PRO	Yes
911401505546	RS378B P7 930 PSD-E MB M55 PRO	Yes
911401505646	RS378B P7 940 PSD-E MB M55 PRO	Yes
911401505746	RS378B P7 927 PSD-E WB M55 PRO	Yes
911401505846	RS378B P7 930 PSD-E WB M55 PRO	Yes
911401505946	RS378B P7 940 PSD-E WB M55 PRO	Yes
911401506046	RS378B P9 927 PSD-E NB M55 PRO	Yes
911401506146	RS378B P9 930 PSD-E NB M55 PRO	Yes
911401506246	RS378B P9 940 PSD-E NB M55 PRO	Yes
911401506346	RS378B P9 927 PSD-E MB M55 PRO	Yes
911401506446	RS378B P9 930 PSD-E MB M55 PRO	Yes
911401506546	RS378B P9 940 PSD-E MB M55 PRO	Yes
911401506646	RS378B P9 927 PSD-E WB M55 PRO	Yes
911401506746	RS378B P9 930 PSD-E WB M55 PRO	Yes
911401506846	RS378B P9 940 PSD-E WB M55 PRO	Yes
911401508746	RS378X P9 930 WIA MB M55 PRO	Yes
911401508846	RS378X P9 930 WIA WB M55 PRO	Yes
911401509346	RS378B P7 930 PSU-E MB M55 WP PRO	Yes
911401509446	RS378B P7 930 PSU-E WB M55 WP PRO	Yes
911401509546	RS378B P9 930 PSU-E MB M55 WP PRO	Yes
911401509646	RS378B P9 930 PSU-E WB M55 WP PRO	Yes
911401518946	RS378B P7 PSD-TNW NB M55 PRO	No
911401519046	RS378B P7 PSD-TNW MB M55 PRO	No
911401519146	RS378B P7 PSD-TNW WB M55 PRO	No
911401519246	RS378B P9 PSD-TNW NB M55 PRO	No
911401519346	RS378B P9 PSD-TNW MB M55 PRO	No

Order Code	Full Product Name	CE mark
911401519446	RS378B P9 PSD-TNW WB M55 PRO	No
911401595145	RS378B P3 927 PSU-E MB D35 G-TT PRO	Yes
911401595245	RS378B P3 930 PSU-E MB D35 G-TT PRO	Yes
911401595345	RS378B P3 940 PSU-E MB D35 G-TT PRO	Yes
911401595445	RS378B P3 927 PSU-E WB D35 G-TT PRO	Yes
911401595545	RS378B P3 930 PSU-E WB D35 G-TT PRO	Yes
911401595645	RS378B P3 940 PSU-E WB D35 G-TT PRO	Yes
911401595745	RS378B P5 927 PSU-E MB D35 G-TT PRO	Yes
911401595845	RS378B P5 930 PSU-E MB D35 G-TT PRO	Yes
911401595945	RS378B P5 940 PSU-E MB D35 G-TT PRO	Yes
911401596045	RS378B P5 927 PSU-E WB D35 G-TT PRO	Yes
911401596145	RS378B P5 930 PSU-E WB D35 G-TT PRO	Yes
911401596245	RS378B P5 940 PSU-E WB D35 G-TT PRO	Yes
911401596345	RS378B P5 927 PSD-E MB D35 G-TT PRO	Yes
911401596445	RS378B P5 930 PSD-E MB D35 G-TT PRO	Yes
911401596545	RS378B P5 940 PSD-E MB D35 G-TT PRO	Yes
911401596645	RS378B P5 927 PSD-E WB D35 G-TT PRO	Yes
911401596745	RS378B P5 930 PSD-E WB D35 G-TT PRO	Yes
911401596845	RS378B P5 940 PSD-E WB D35 G-TT PRO	Yes
911401510146	RS378B P12 927 PSU-E NB M70 PRO	Yes
911401510246	RS378B P12 930 PSU-E NB M70 PRO	Yes
911401510346	RS378B P12 940 PSU-E NB M70 PRO	Yes
911401510446	RS378B P12 927 PSU-E MB M70 PRO	Yes
911401510546	RS378B P12 930 PSU-E MB M70 PRO	Yes
911401510646	RS378B P12 940 PSU-E MB M70 PRO	Yes
911401510746	RS378B P12 927 PSU-E WB M70 PRO	Yes
911401510846	RS378B P12 930 PSU-E WB M70 PRO	Yes
911401510946	RS378B P12 940 PSU-E WB M70 PRO	Yes
911401511046	RS378B P17 927 PSU-E NB M70 PRO	Yes
911401511146	RS378B P17 930 PSU-E NB M70 PRO	Yes
911401511246	RS378B P17 940 PSU-E NB M70 PRO	Yes
911401511346	RS378B P17 927 PSU-E MB M70 PRO	Yes
911401511446	RS378B P17 930 PSU-E MB M70 PRO	Yes
911401511546	RS378B P17 940 PSU-E MB M70 PRO	Yes
911401511646	RS378B P17 927 PSU-E WB M70 PRO	Yes
911401511746	RS378B P17 930 PSU-E WB M70 PRO	Yes
911401511846	RS378B P17 940 PSU-E WB M70 PRO	Yes
911401511946	RS378B P19 927 PSU-E NB M70 PRO	Yes
911401512046	RS378B P19 930 PSU-E NB M70 PRO	Yes
911401512146	RS378B P19 940 PSU-E NB M70 PRO	Yes
911401512246	RS378B P19 927 PSU-E MB M70 PRO	Yes
911401512346	RS378B P19 930 PSU-E MB M70 PRO	Yes
911401512446	RS378B P19 940 PSU-E MB M70 PRO	Yes
911401512546	RS378B P19 927 PSU-E WB M70 PRO	Yes
911401512646	RS378B P19 930 PSU-E WB M70 PRO	Yes
911401512746	RS378B P19 940 PSU-E WB M70 PRO	Yes
911401513746	RS378B P12 927 PSD-E NB M70 PRO	Yes
911401513846	RS378B P12 930 PSD-E NB M70 PRO	Yes
911401513946	RS378B P12 940 PSD-E NB M70 PRO	Yes
911401514046	RS378B P12 927 PSD-E MB M70 PRO	Yes
911401514146	RS378B P12 930 PSD-E MB M70 PRO	Yes
911401514246	RS378B P12 940 PSD-E MB M70 PRO	Yes

Order Code	Full Product Name	CE mark
911401514346	RS378B P12 927 PSD-E WB M70 PRO	Yes
911401514446	RS378B P12 930 PSD-E WB M70 PRO	Yes
911401514546	RS378B P12 940 PSD-E WB M70 PRO	Yes
911401514646	RS378B P18 927 PSD-E NB M70 PRO	Yes
911401514746	RS378B P18 930 PSD-E NB M70 PRO	Yes
911401514846	RS378B P18 940 PSD-E NB M70 PRO	Yes
911401514946	RS378B P18 927 PSD-E MB M70 PRO	Yes
911401515046	RS378B P18 930 PSD-E MB M70 PRO	Yes
911401515146	RS378B P18 940 PSD-E MB M70 PRO	Yes
911401515246	RS378B P18 927 PSD-E WB M70 PRO	Yes
911401515346	RS378B P18 930 PSD-E WB M70 PRO	Yes
911401515446	RS378B P18 940 PSD-E WB M70 PRO	Yes
911401515546	RS378B P20 927 PSD-E NB M70 PRO	Yes
911401515646	RS378B P20 930 PSD-E NB M70 PRO	Yes
911401515746	RS378B P20 940 PSD-E NB M70 PRO	Yes
911401515846	RS378B P20 927 PSD-E MB M70 PRO	Yes
911401515946	RS378B P20 930 PSD-E MB M70 PRO	Yes
911401516046	RS378B P20 940 PSD-E MB M70 PRO	Yes
911401516146	RS378B P20 927 PSD-E WB M70 PRO	Yes
911401516246	RS378B P20 930 PSD-E WB M70 PRO	Yes
911401516346	RS378B P20 940 PSD-E WB M70 PRO	Yes
911401517346	RS378X P12 930 WIA MB M70 PRO	Yes
911401517446	RS378X P12 930 WIA WB M70 PRO	Yes
911401517546	RS378X P19 930 WIA MB M70 PRO	Yes
911401517646	RS378X P19 930 WIA WB M70 PRO	Yes
911401517746	RS378X P18 930 WIA MB M70 PRO	Yes
911401517846	RS378X P18 930 WIA WB M70 PRO	Yes
911401518146	RS378B P12 930 PSU-E MB M70 WP PRO	Yes
911401518246	RS378B P12 930 PSU-E WB M70 WP PRO	Yes
911401518346	RS378B P17 930 PSU-E MB M70 WP PRO	Yes
911401518446	RS378B P17 930 PSU-E WB M70 WP PRO	Yes
911401518546	RS378B P19 930 PSU-E MB M70 WP PRO	Yes
911401518646	RS378B P19 930 PSU-E WB M70 WP PRO	Yes
911401520446	RS378B P13 PSD-TNW NB M70 PRO	No
911401520546	RS378B P13 PSD-TNW MB M70 PRO	No
911401520646	RS378B P13 PSD-TNW WB M70 PRO	No
911401520746	RS378B P19 PSD-TNW NB M70 PRO	No
911401520846	RS378B P19 PSD-TNW MB M70 PRO	No
911401520946	RS378B P19 PSD-TNW WB M70 PRO	No
911401521046	RS378B P22 PSD-TNW NB M70 PRO	No
911401521146	RS378B P22 PSD-TNW MB M70 PRO	No
911401521246	RS378B P22 PSD-TNW WB M70 PRO	No
911401512846	RS378B P27 927 PSU-E NB M70 PRO	Yes
911401512946	RS378B P27 930 PSU-E NB M70 PRO	Yes
911401513046	RS378B P27 940 PSU-E NB M70 PRO	Yes
911401513146	RS378B P27 927 PSU-E MB M70 PRO	Yes
911401513246	RS378B P27 930 PSU-E MB M70 PRO	Yes
911401513346	RS378B P27 940 PSU-E MB M70 PRO	Yes
911401513446	RS378B P27 927 PSU-E WB M70 PRO	Yes
911401513546	RS378B P27 930 PSU-E WB M70 PRO	Yes
911401513646	RS378B P27 940 PSU-E WB M70 PRO	Yes
911401516446	RS378B P27 927 PSD-E NB M70 PRO	Yes

Order Code	Full Product Name	CE mark
911401516546	RS378B P27 930 PSD-E NB M70 PRO	Yes
911401516646	RS378B P27 940 PSD-E NB M70 PRO	Yes
911401516746	RS378B P27 927 PSD-E MB M70 PRO	Yes
911401516846	RS378B P27 930 PSD-E MB M70 PRO	Yes
911401516946	RS378B P27 940 PSD-E MB M70 PRO	Yes
911401517046	RS378B P27 927 PSD-E WB M70 PRO	Yes
911401517146	RS378B P27 930 PSD-E WB M70 PRO	Yes
911401517246	RS378B P27 940 PSD-E WB M70 PRO	Yes
911401517946	RS378X P28 930 WIA MB M70 PRO	Yes
911401518046	RS378X P28 930 WIA WB M70 PRO	Yes
911401518746	RS378B P27 930 PSU-E MB M70 WP PRO	Yes
911401518846	RS378B P27 930 PSU-E WB M70 WP PRO	Yes
911401521346	RS378B P29 PSD-TNW NB M70 PRO	No
911401521446	RS378B P29 PSD-TNW MB M70 PRO	No
911401521546	RS378B P29 PSD-TNW WB M70 PRO	No
911401530846	SM378B S P8 927 PSU-E NB D100 G-TT PRO	Yes
911401530946	SM378B S P8 930 PSU-E NB D100 G-TT PRO	Yes
911401531046	SM378B S P8 940 PSU-E NB D100 G-TT PRO	Yes
911401531146	SM378B S P8 927 PSU-E MB D100 G-TT PRO	Yes
911401531246	SM378B S P8 930 PSU-E MB D100 G-TT PRO	Yes
911401531346	SM378B S P8 940 PSU-E MB D100 G-TT PRO	Yes
911401531446	SM378B S P8 927 PSU-E WB D100 G-TT PRO	Yes
911401531546	SM378B S P8 930 PSU-E WB D100 G-TT PRO	Yes
911401531646	SM378B S P8 940 PSU-E WB D100 G-TT PRO	Yes
911401531746	SM378B S P11 927 PSU-E NB D100 G-TT PRO	Yes
911401531846	SM378B S P11 930 PSU-E NB D100 G-TT PRO	Yes
911401531946	SM378B S P11 940 PSU-E NB D100 G-TT PRO	Yes
911401532046	SM378B S P11 927 PSU-E MB D100 G-TT PRO	Yes
911401532146	SM378B S P11 930 PSU-E MB D100 G-TT PRO	Yes
911401532246	SM378B S P11 940 PSU-E MB D100 G-TT PRO	Yes
911401532346	SM378B S P11 927 PSU-E WB D100 G-TT PRO	Yes
911401532446	SM378B S P11 930 PSU-E WB D100 G-TT PRO	Yes
911401532546	SM378B S P11 940 PSU-E WB D100 G-TT PRO	Yes
911401532646	SM378B S P13 927 PSU-E NB D100 G-TT PRO	Yes
911401532746	SM378B S P13 930 PSU-E NB D100 G-TT PRO	Yes
911401532846	SM378B S P13 940 PSU-E NB D100 G-TT PRO	Yes
911401532946	SM378B S P13 927 PSU-E MB D100 G-TT PRO	Yes
911401533046	SM378B S P13 930 PSU-E MB D100 G-TT PRO	Yes
911401533146	SM378B S P13 940 PSU-E MB D100 G-TT PRO	Yes
911401533246	SM378B S P13 927 PSU-E WB D100 G-TT PRO	Yes
911401533346	SM378B S P13 930 PSU-E WB D100 G-TT PRO	Yes
911401533446	SM378B S P13 940 PSU-E WB D100 G-TT PRO	Yes
911401533546	SM378B S P20 927 PSU-E NB D100 G-TT PRO	Yes
911401533646	SM378B S P20 930 PSU-E NB D100 G-TT PRO	Yes
911401533746	SM378B S P20 940 PSU-E NB D100 G-TT PRO	Yes
911401533846	SM378B S P20 927 PSU-E MB D100 G-TT PRO	Yes
911401533946	SM378B S P20 930 PSU-E MB D100 G-TT PRO	Yes
911401534046	SM378B S P20 940 PSU-E MB D100 G-TT PRO	Yes
911401534146	SM378B S P20 927 PSU-E WB D100 G-TT PRO	Yes
911401534246	SM378B S P20 930 PSU-E WB D100 G-TT PRO	Yes
911401534346	SM378B S P20 940 PSU-E WB D100 G-TT PRO	Yes
911401534446	SM378B S P20 927 PSD-E NB D100 G-TT PRO	Yes

Order Code	Full Product Name	CE mark
911401534546	SM378B S P20 930 PSD-E NB D100 G-TT PRO	Yes
911401534646	SM378B S P20 940 PSD-E NB D100 G-TT PRO	Yes
911401534746	SM378B S P20 927 PSD-E MB D100 G-TT PRO	Yes
911401534846	SM378B S P20 930 PSD-E MB D100 G-TT PRO	Yes
911401534946	SM378B S P20 940 PSD-E MB D100 G-TT PRO	Yes
911401535046	SM378B S P20 927 PSD-E WB D100 G-TT PRO	Yes
911401535146	SM378B S P20 930 PSD-E WB D100 G-TT PRO	Yes
911401535246	SM378B S P20 940 PSD-E WB D100 G-TT PRO	Yes
911401535446	SM378B S P8 927 PSD-E NB D100 G-TT PRO	Yes
911401535546	SM378B S P8 930 PSD-E NB D100 G-TT PRO	Yes
911401535646	SM378B S P8 940 PSD-E NB D100 G-TT PRO	Yes
911401535746	SM378B S P8 927 PSD-E MB D100 G-TT PRO	Yes
911401535846	SM378B S P8 930 PSD-E MB D100 G-TT PRO	Yes
911401535946	SM378B S P8 940 PSD-E MB D100 G-TT PRO	Yes
911401536046	SM378B S P8 927 PSD-E WB D100 G-TT PRO	Yes
911401536146	SM378B S P8 930 PSD-E WB D100 G-TT PRO	Yes
911401536246	SM378B S P8 940 PSD-E WB D100 G-TT PRO	Yes
911401536346	SM378B S P12 927 PSD-E NB D100 G-TT PRO	Yes
911401536446	SM378B S P12 930 PSD-E NB D100 G-TT PRO	Yes
911401536546	SM378B S P12 940 PSD-E NB D100 G-TT PRO	Yes
911401536646	SM378B S P12 927 PSD-E MB D100 G-TT PRO	Yes
911401536746	SM378B S P12 930 PSD-E MB D100 G-TT PRO	Yes
911401536846	SM378B S P12 940 PSD-E MB D100 G-TT PRO	Yes
911401536946	SM378B S P12 927 PSD-E WB D100 G-TT PRO	Yes
911401537046	SM378B S P12 930 PSD-E WB D100 G-TT PRO	Yes
911401537146	SM378B S P12 940 PSD-E WB D100 G-TT PRO	Yes
911401537246	SM378B S P14 927 PSD-E NB D100 G-TT PRO	Yes
911401537346	SM378B S P14 930 PSD-E NB D100 G-TT PRO	Yes
911401537446	SM378B S P14 940 PSD-E NB D100 G-TT PRO	Yes
911401537546	SM378B S P14 927 PSD-E MB D100 G-TT PRO	Yes
911401537646	SM378B S P14 930 PSD-E MB D100 G-TT PRO	Yes
911401537746	SM378B S P14 940 PSD-E MB D100 G-TT PRO	Yes
911401537846	SM378B S P14 927 PSD-E WB D100 G-TT PRO	Yes
911401537946	SM378B S P14 930 PSD-E WB D100 G-TT PRO	Yes
911401538046	SM378B S P14 940 PSD-E WB D100 G-TT PRO	Yes
911401538146	SM378X S P8 930 WIA MB D100 G-TT PRO	Yes
911401538246	SM378X S P8 930 WIA WB D100 G-TT PRO	Yes
911401538346	SM378X S P12 930 WIA MB D100 G-TT PRO	Yes
911401538446	SM378X S P12 930 WIA WB D100 G-TT PRO	Yes
911401538546	SM378X S P14 930 WIA MB D100 G-TT PRO	Yes
911401538646	SM378X S P14 930 WIA WB D100 G-TT PRO	Yes
911401538746	SM378X S P20 930 WIA MB D100 G-TT PRO	Yes
911401538846	SM378X S P20 930 WIA WB D100 G-TT PRO	Yes
911401538946	SM378B S P9 PSD-TNW NB D100 G-TT PRO	No
911401539046	SM378B S P9 PSD-TNW MB D100 G-TT PRO	No
911401539146	SM378B S P9 PSD-TNW WB D100 G-TT PRO	No
911401539246	SM378B S P12 PSD-TNW NB D100 G-TT PRO	No
911401539346	SM378B S P12 PSD-TNW MB D100 G-TT PRO	No
911401539446	SM378B S P12 PSD-TNW WB D100 G-TT PRO	No
911401539546	SM378B S P15 PSD-TNW NB D100 G-TT PRO	No
911401539646	SM378B S P15 PSD-TNW MB D100 G-TT PRO	No
911401539746	SM378B S P15 PSD-TNW WB D100 G-TT PRO	No
911401539846	SM378B S P22 PSD-TNW NB D100 G-TT PRO	No

Order Code	Full Product Name	CE mark
911401539946	SM378B S P22 PSD-TNW MB D100 G-TT PRO	No
911401540046	SM378B S P22 PSD-TNW WB D100 G-TT PRO	No
911401503046	RS378B P12 927 PSU-E NB M55 PRO	Yes
911401503146	RS378B P12 930 PSU-E NB M55 PRO	Yes
911401503246	RS378B P12 940 PSU-E NB M55 PRO	Yes
911401503346	RS378B P12 927 PSU-E MB M55 PRO	Yes
911401503446	RS378B P12 930 PSU-E MB M55 PRO	Yes
911401503546	RS378B P12 940 PSU-E MB M55 PRO	Yes
911401503646	RS378B P12 927 PSU-E WB M55 PRO	Yes
911401503746	RS378B P12 930 PSU-E WB M55 PRO	Yes
911401503846	RS378B P12 940 PSU-E WB M55 PRO	Yes
911401503946	RS378B P14 927 PSU-E NB M55 PRO	Yes
911401504046	RS378B P14 930 PSU-E NB M55 PRO	Yes
911401504146	RS378B P14 940 PSU-E NB M55 PRO	Yes
911401504246	RS378B P14 927 PSU-E MB M55 PRO	Yes
911401504346	RS378B P14 930 PSU-E MB M55 PRO	Yes
911401504446	RS378B P14 940 PSU-E MB M55 PRO	Yes
911401504546	RS378B P14 927 PSU-E WB M55 PRO	Yes
911401504646	RS378B P14 930 PSU-E WB M55 PRO	Yes
911401504746	RS378B P14 940 PSU-E WB M55 PRO	Yes
911401506946	RS378B P13 927 PSD-E NB M55 PRO	Yes
911401507046	RS378B P13 930 PSD-E NB M55 PRO	Yes
911401507146	RS378B P13 940 PSD-E NB M55 PRO	Yes
911401507246	RS378B P13 927 PSD-E MB M55 PRO	Yes
911401507346	RS378B P13 930 PSD-E MB M55 PRO	Yes
911401507446	RS378B P13 940 PSD-E MB M55 PRO	Yes
911401507546	RS378B P13 927 PSD-E WB M55 PRO	Yes
911401507646	RS378B P13 930 PSD-E WB M55 PRO	Yes
911401507746	RS378B P13 940 PSD-E WB M55 PRO	Yes
911401507846	RS378B P15 927 PSD-E NB M55 PRO	Yes
911401507946	RS378B P15 930 PSD-E NB M55 PRO	Yes
911401508046	RS378B P15 940 PSD-E NB M55 PRO	Yes
911401508146	RS378B P15 927 PSD-E MB M55 PRO	Yes
911401508246	RS378B P15 930 PSD-E MB M55 PRO	Yes
911401508346	RS378B P15 940 PSD-E MB M55 PRO	Yes
911401508446	RS378B P15 927 PSD-E WB M55 PRO	Yes
911401508546	RS378B P15 930 PSD-E WB M55 PRO	Yes
911401508646	RS378B P15 940 PSD-E WB M55 PRO	Yes
911401508946	RS378X P12 930 WIA MB M55 PRO	Yes
911401509046	RS378X P12 930 WIA WB M55 PRO	Yes
911401509146	RS378X P14 930 WIA MB M55 PRO	Yes
911401509246	RS378X P14 930 WIA WB M55 PRO	Yes
911401509746	RS378B P12 930 PSU-E MB M55 WP PRO	Yes
911401509846	RS378B P12 930 PSU-E WB M55 WP PRO	Yes
911401509946	RS378B P14 930 PSU-E MB M55 WP PRO	Yes
911401510046	RS378B P14 930 PSU-E WB M55 WP PRO	Yes
911401519546	RS378B P13 PSD-TNW NB M55 PRO	No
911401519646	RS378B P13 PSD-TNW MB M55 PRO	No
911401519746	RS378B P13 PSD-TNW WB M55 PRO	No
911401519846	RS378B P15 PSD-TNW NB M55 PRO	No
911401519946	RS378B P15 PSD-TNW MB M55 PRO	No
911401520046	RS378B P15 PSD-TNW WB M55 PRO	No

© 2025 Signify Holding All rights reserved. Signify does not give any representation or warranty as to the accuracy or completeness of the information included herein and shall not be liable for any action in reliance thereon. The information presented in this document is not intended as any commercial offer and does not form part of any quotation or contract, unless otherwise agreed by Signify. All trademarks are owned by Signify Holding or their respective owners.