PHILIPS

# MASTERColour CDM-R111 Elite

DCDMR11E



## Perfect sparkle, trendy design

MASTERColour CDM-R111 Elite combines the trendy look of 111 mm aluminum-reflector halogen lamps with the long life, high energy efficiency and crisp white light of MASTERColour CDM.

### Benefits

- Crisp white sparkling light
- Easy installation
- Less glare, comfort for shoppers and staff

### Applications

- Accent and decorative lighting: display lighting with sparkling, theatrical effects, even in surroundings with very high background ambient light levels, such as shops windows
- General lighting: in downlighters, a warm and comfortable atmosphere can be created

### Features

- High lamp efficacy
- Long lamp lifetime compared to incandescent and halogen lamps
- The ceramic discharge tube is optimally positioned and stable in the reflector
- UV-block burner capsule
- Anti-glare cap design

- Control gear must include end-of-life protection (IEC61167, IEC 62035)
- Use only with electronic control gear. 35W/930 lamps may also use electromagnetic gear.
- A lamp breaking is extremely unlikely to have any impact on your health. If a lamp breaks, ventilate the room for 30 minutes and remove the parts, preferably with gloves. Put them in a sealed plastic bag and take it to your local waste facilities for recycling. Do not use a vacuum cleaner.

## Versions



LPPR_CDMR111E_0001-
Product photo

## Dimensional drawing

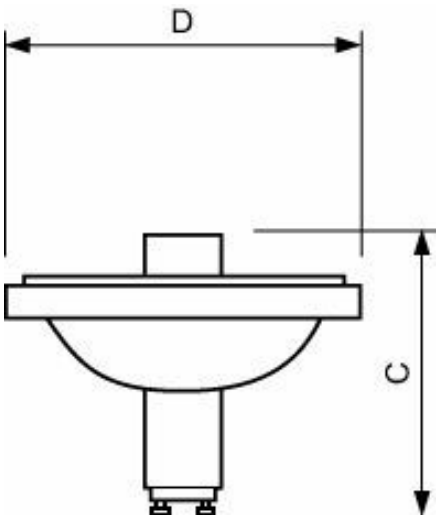


| Product | D (max) | C (max) |
|---|---|---|
| MASTERC CDM-R111 Elite 35W/930 GX8.5 10D | 111 mm | 95 mm |
| MASTERC CDM-R111 Elite 35W/930 GX8.5 24D | 111 mm | 95 mm |
| MASTERC CDM-R111 Elite 35W/930 GX8.5 40D | 111 mm | 95 mm |
| MASTERC CDM-R111 Elite 70W/930 GX8.5 10D | 111 mm | 95 mm |
| MASTERC CDM-R111 Elite 70W/930 GX8.5 24D | 111 mm | 95 mm |
| MASTERC CDM-R111 Elite 70W/930 GX8.5 40D | 111 mm | 95 mm |

### General Information

| | |
|---|---|
| Cap-Base | GX8.5 |
| Operating Position | UNIVERSAL [Any or Universal (U)] |
| Switching Cycle | 1,050 |

### Light Technical

| | |
|---|---|
| Color Designation | Warm White (WW) |
| Chromaticity Coordinate X (Nom) | 0.434 |
| Chromaticity Coordinate Y (Nom) | 0.398 |
| Correlated Color Temperature (Nom) | 3000 K |
| LLMF At End Of Nominal Lifetime (Nom) | 70 % |

### Operating and Electrical

| | |
|---|---|
| Warm-up time to 60% light | 120 s |
| Voltage (Nom) | 89 V |

### Controls and Dimming

| | |
|---|---|
| Dimmable | No |

### Mechanical and Housing

| | |
|---|---|
| Bulb Finish | Reflector |
| Bulb Shape | R111 |

## Light Technical

| Order Code | Full Product Name | Beam Angle (Nom) | Luminous Flux | Luminous Intensity (Nom) | Luminous Efficacy (rated) (Nom) | Color rendering index (CRI) |
|---|---|---|---|---|---|---|
| 928195305330 | MASTERC CDM-R111 Elite 35W/930 GX8.5 10D | 10 degree(s) | 1,350 lm | 36,000 cd | 37 lm/W | 90 |
| 928195405330 | MASTERC CDM-R111 Elite 35W/930 GX8.5 24D | 24 degree(s) | 1,750 lm | 8,500 cd | 46 lm/W | 90 |
| 928195505330 | MASTERC CDM-R111 Elite 35W/930 GX8.5 40D | 40 degree(s) | 1,750 lm | 4,500 cd | 46 lm/W | 90 |
| 928195605330 | MASTERC CDM-R111 Elite 70W/930 GX8.5 10D | 10 degree(s) | 2,805 lm | 45,000 cd | 40 lm/W | 92 |
| 928195705330 | MASTERC CDM-R111 Elite 70W/930 GX8.5 24D | 24 degree(s) | 3,550 lm | 16,000 cd | 50 lm/W | 92 |
| 928195805330 | MASTERC CDM-R111 Elite 70W/930 GX8.5 40D | 40 degree(s) | 3,550 lm | 8,500 cd | 50 lm/W | 92 |

## Operating and Electrical

| Order Code | Full Product Name | Power Consumption |
|---|---|---|
| 928195305330 | MASTERC CDM-R111 Elite 35W/930 GX8.5 10D | 39.1 W |
| 928195405330 | MASTERC CDM-R111 Elite 35W/930 GX8.5 24D | 39.1 W |
| 928195505330 | MASTERC CDM-R111 Elite 35W/930 GX8.5 40D | 39.1 W |
| 928195605330 | MASTERC CDM-R111 Elite 70W/930 GX8.5 10D | 73.2 W |
| 928195705330 | MASTERC CDM-R111 Elite 70W/930 GX8.5 24D | 73.2 W |
| 928195805330 | MASTERC CDM-R111 Elite 70W/930 GX8.5 40D | 73.2 W |

## Approval and Application

| Order Code | Full Product Name | Mercury (Hg) Content (Max) | Mercury (Hg) Content (Nom) | Energy Consumption kWh/ 1000 h |
|---|---|---|---|---|
| 928195305330 | MASTERC CDM-R111 Elite 35W/930 GX8.5 10D | 4.7 mg | 4.7 mg | 40 kWh |
| 928195405330 | MASTERC CDM-R111 Elite 35W/930 GX8.5 24D | 4.7 mg | 4.7 mg | 40 kWh |
| 928195505330 | MASTERC CDM-R111 Elite 35W/930 GX8.5 40D | 4.7 mg | 4.7 mg | 40 kWh |
| 928195605330 | MASTERC CDM-R111 Elite 70W/930 GX8.5 10D | 6.6 mg | 6.6 mg | 74 kWh |
| 928195705330 | MASTERC CDM-R111 Elite 70W/930 GX8.5 24D | 6.6 mg | 6.6 mg | 74 kWh |
| 928195805330 | MASTERC CDM-R111 Elite 70W/930 GX8.5 40D | 6.6 mg | 6.6 mg | 74 kWh |

© 2026 Signify Holding. All rights reserved. The information provided herein is subject to change, without notice. Signify does not give any representation or warranty as to the accuracy or completeness of the information included herein and shall not be liable for any action in reliance thereon. The information presented in this document is not intended as any commercial offer and does not form part of any quotation or contract, unless otherwise agreed by Signify. Philips and the Philips Shield Emblem are registered trademarks of Koninklijke Philips N.V.