PHILIPS

BY500B LED88S-865 PSU W7L240 OD WH S2

919515815428



Urban Linear, 83 W, 110 lm, 6500 K

Canopy Lighting has taken a new wave as canopies have become integrated part to every architecture design. Today, canopies have extended from Petrol stations to Malls, food courts, metro station, building entrances and more. A Linear canopy solution which illuminates the areas under canopies uniformly and also creates new a brand identify along with breaking the monotony of Petro station lighting. This luminaire which will help Petro stations to standout on highways along with reliability of Philips brand offered in professional specifications which makes the Product robust in the industrial, easy to install and maintain. Less maintenance in the longer run, resulting in an attractive Total Cost of Ownership.

Warnings and Safety

- Meant for Indoor Application Only. Should not be used in outdoor environment.

General Information

Light source engine type	LED

Light Technical

Luminous Flux	110 lm
Correlated Color Temperature (Nom)	6500 K
Luminous Efficacy (rated) (Nom)	9,100 lm/W
Color rendering index (CRI)	>80
Light source color	865 cool daylight

Operating and Electrical

Input Voltage	140-270 V
Line Frequency	50 Hz
Power Consumption	83 W
Power Factor (Fraction)	0.95
Number of products on MCB of 16 A type B	100
Protection class IEC	Safety class I

Controls and Dimming

Dimmable	No
Control interface	-

Mechanical and Housing

Housing Material	Aluminum extruded
Optical cover material	Polycarbonate
Housing Color	White
Optical cover finish	Opal
Ingress protection code	IP66 [Dust penetration-protected, jet-proof]
Mech. impact protection code	IK08 [5 J vandal-protected]
Optical cover type	Opal diffuser in polycarbonate cover
Net Weight (Piece)	0.800 kg

Dimensional drawing

Type	Dimensions L x W x H (mm)	Ceiling Cut Out (mm)	IP	Kg
BY500B LED88S S2	2437 x 75 x 126	2425 x 65	IP66	4.5

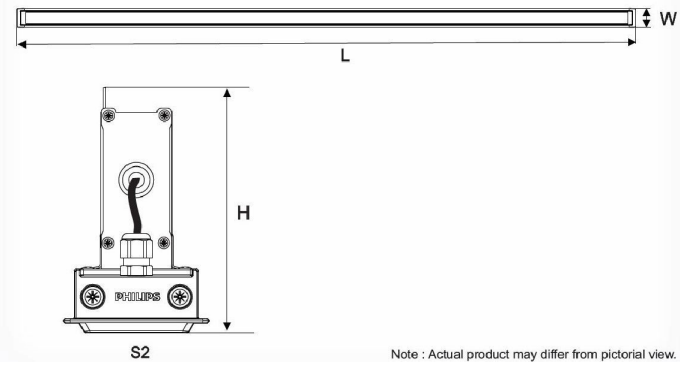

Approval and Application

CE mark	No
Ambient temperature range	0 to +45 °C

Initial Performance (IEC Compliant)

Luminous flux tolerance	+/-10%
Power consumption tolerance	+/-10%

Product Data

Order product name	BY500B LED88S-865 PSU W7L240 OD WH S2
Full product name	BY500B LED88S-865 PSU W7L240 OD WH S2
Order code	919515815428
Material Nr. (12NC)	919515815428
Numerator - Quantity Per Pack	1
Numerator - Packs per outer box	4

Related Documents

Documents and certificates	Document Name	Download
Installation Instructions	Urban Linea_BY500B-INI.pdf	Download

© 2026 Signify Holding. All rights reserved. The information provided herein is subject to change, without notice. Signify does not give any representation or warranty as to the accuracy or completeness of the information included herein and shall not be liable for any action in reliance thereon. The information presented in this document is not intended as any commercial offer and does not form part of any quotation or contract, unless otherwise agreed by Signify. Philips and the Philips Shield Emblem are registered trademarks of Koninklijke Philips N.V.