PHILIPS

OccuSwitch

LOCCSWIC



OccuSwitch - a smart move

The OccuSwitch is a movement detector with a built-in switch. It will switch the lights off in a room or area when it is vacated and thus save up to 30% on electricity. The OccuSwitch can switch any load of up to 6 A and control an area of between 20 and 25 m^2. A detachable mains connector enables easy installation and mounting of the OccuSwitch in the ceiling

Benefits

- Energy savings of up to 30% and good pay-back
- Works with almost all lamp- and luminaire types
- Easy to install, enables even faster installation by optional Wieland connectors.

Applications

- Offices, schools (incl. board lighting)
- Similar applications, including toilets, storage rooms, etcetera
- Designed for recessed ceiling mounting
- Surface mounting optional with surface box, possible to install with recessed wiring or a surface-mounted duct
- Optimized for ceiling heights of between 2.5 and 4 meters

Features

- OccuSwitch has a smart timer that will extend the delay time by 10 minutes if movement is detected shortly after switch-off, assuming that the area is still in use but there is very little movement
- The OccuSwitch has a retractable shield that can be used to shield off areas, e.g. corridors, adjacent to the area the OccuSwitch is controlling

Versions



SES LSM1010



GPPR LOCCSWIi 0002



GPPR LOCCSWIi 0004



SES LCM106x

Dimensional drawing

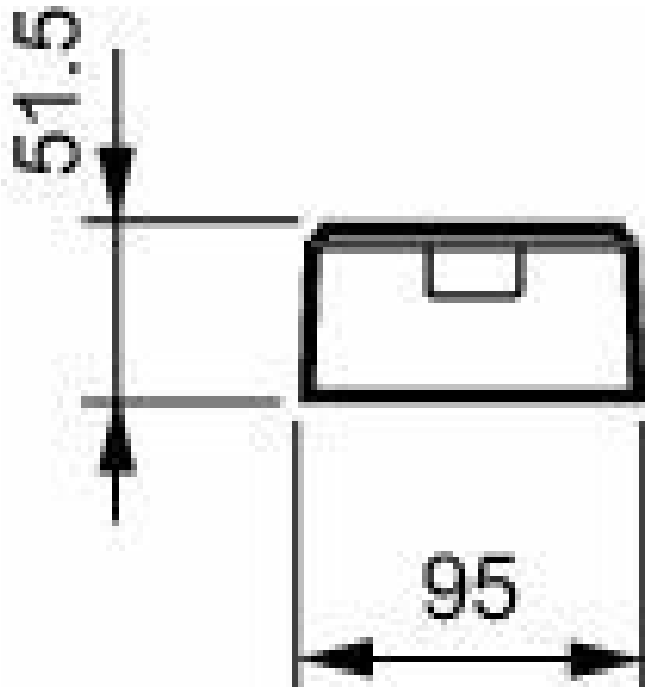

LRH1070/00 SENSR SURFACE BOX

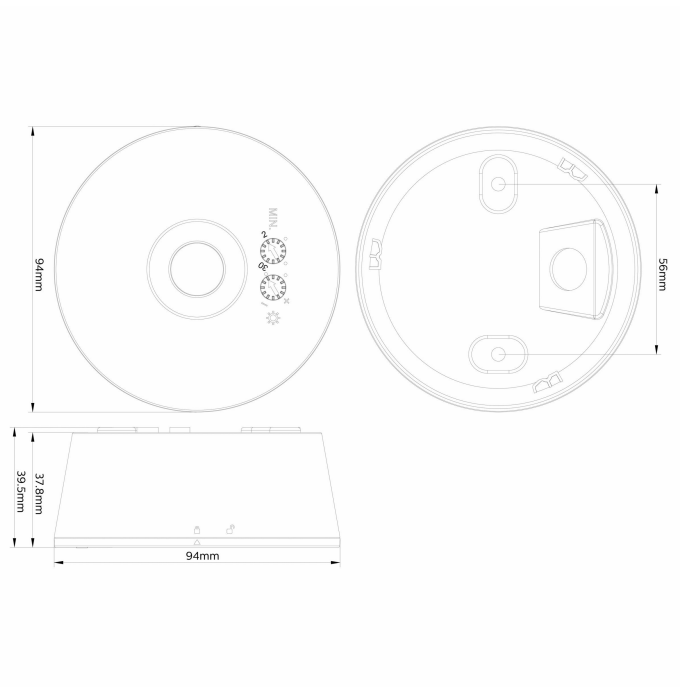

SES LSM1010 Occ PIR WH

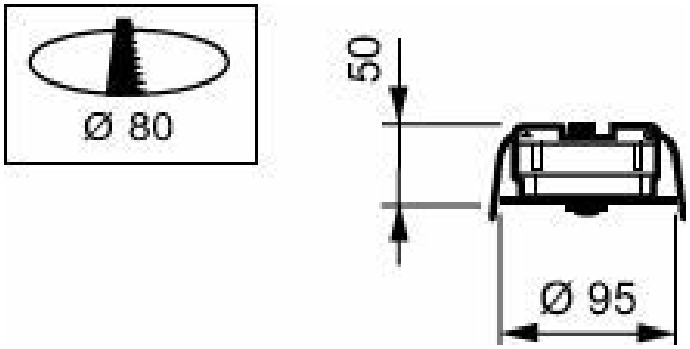

LRM1080/00 SENSR MOV DET ST IR

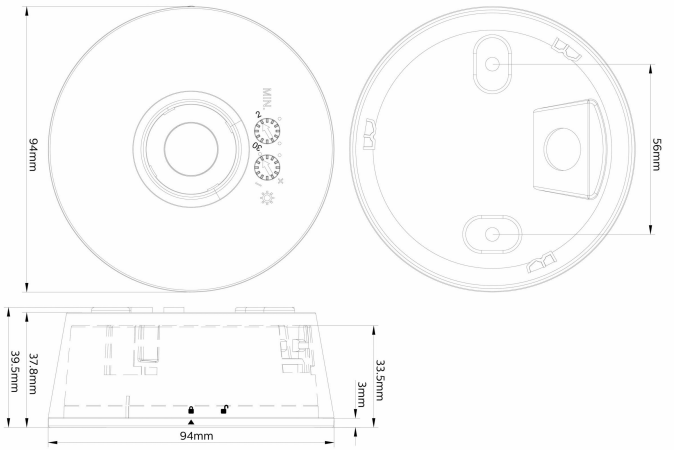

SES LCM1060 Occ PIR WH

© 2026 Signify Holding. All rights reserved. The information provided herein is subject to change, without notice. Signify does not give any representation or warranty as to the accuracy or completeness of the information included herein and shall not be liable for any action in reliance thereon. The information presented in this document is not intended as any commercial offer and does not form part of any quotation or contract, unless otherwise agreed by Signify. Philips and the Philips Shield Emblem are registered trademarks of Koninklijke Philips N.V.