PHILIPS

TrueLine Interalu

RC536B



TrueLine Interalu: True sustainable light for special ceiling

Architects need a lighting solution that matches the interior architecture of the space they are enhancing. They want a light with elegant proportions and high light levels that offers maximum design freedom. Philips TrueLine is a flexible linear luminaire for indoor office applications that offers excellent quality with the promise of future-proof upgrades. Specifiers need luminaires that save energy, at the same time as providing the right level of light. TrueLine recessed meets both these sets of requirements. Not only is it compliant with the WELL Building Standard for Light, TrueLIne recessed is rated UGR<19, which is compliant with all office norms (OC). These luminaires in the family are available in different lengths and light outputs. This offers the ultimate design flexibility and unlimited possibilities. TrueLine luminaires are also a sustainable, future-proof choice with high efficiency up to 140 lm/W and the option to upgrade to wireless connectivity and control.

Benefits

- Office compliant lighting
- Future-ready, scalable smart office capabilities
- Compatible with the Interact connected lighting system
- Supports sustainable building design and energy-saving subsidy criteria

Applications

- Offices
- Retail

Features

- Highly-uniform lighting with excellent glare control (UGR<19, L65<3000cd/m2)
- Best-in-class efficacy up to 140 lm/W
- 3000K & 4000K in CRI>90
- Long lifetime L90@50,000 hours
- Integrated sensors/wireless drivers for data collection, occupancy, daylight regulation and wayfinding
- Environmental Product Declaration (EPD)

- The product is IP20 and, as such, is not protected against water ingress. Therefore, we strongly recommend that the environment in which the luminaire is to be installed is suitably checked.
- If the above advice is not taken and the luminaires are subject to water ingress, Philips / Signify cannot guarantee safe failure and the product warranty will become void.

Versions



TrueLine Interalu 4ft KLIMA



TrueLine Interalu 4ft SAPP



TrueLine Interalu 2ft KLIMA



TrueLine InterAlu 2ft Sensor



TrueLine Interalu 2ft SAPP



TrueLine InterAlu 4ft Sensor

Dimensional drawing

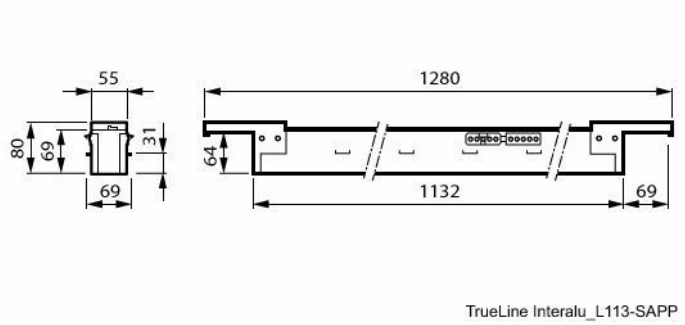

RC536B 25S/940 PSD W5L113 SAPP W5-M/F BK

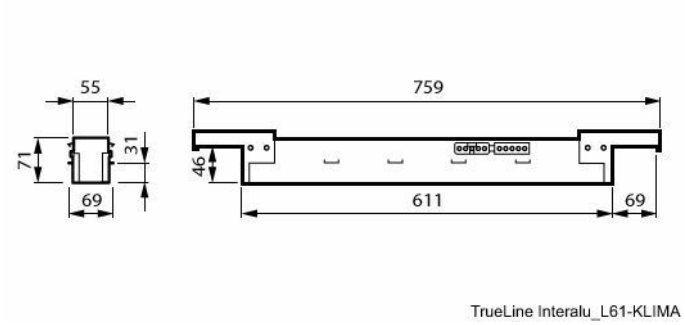

RC536B 20S/930SRD W5L61KLIMA U4W3-M/F BK

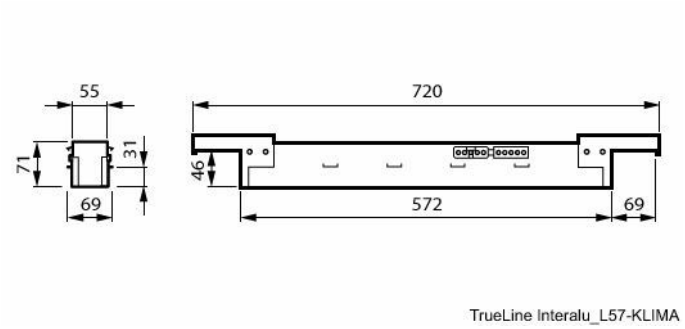

RC536B 20S/930 PSD W5L57 KLIMA W5-M/F BK

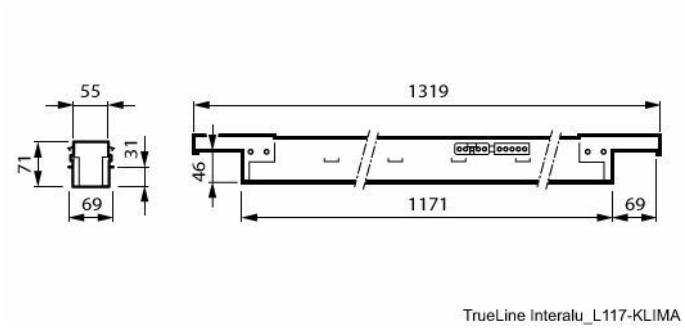

RC536B 40S/940SRD W5L117KLIMA U4W3-M/FBK

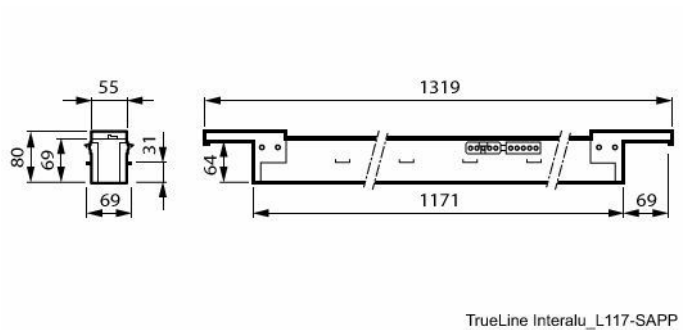

RC536B 40S/940SRD W5L117SAPP U4W3-M/F BK

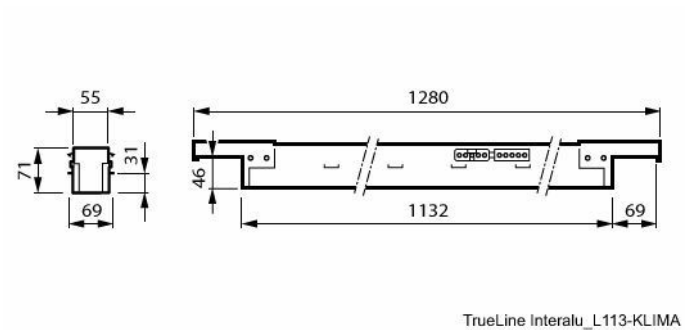

RC536B 40S/940 PSD W5L113KLIMA W5-M/F BK

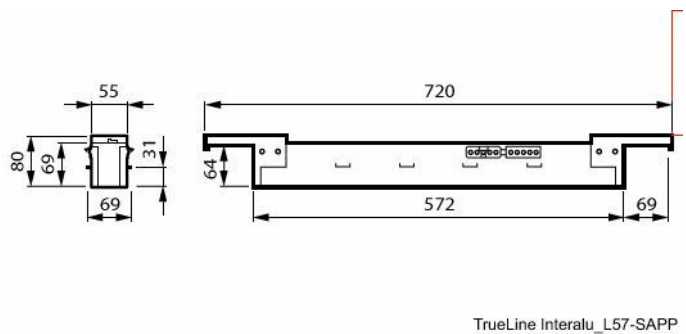

RC536B 20S/940 PSD W5L57 SAPP W5-M/F BK

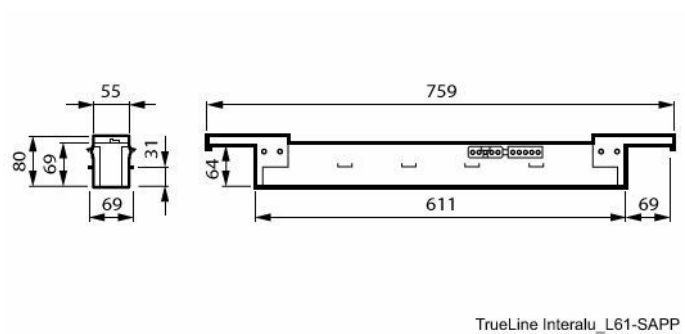

RC536B 20S/940 SRD W5L61SAPP U4W3-M/F BK

Product details



TrueLine Interalu W5MF connector



W3 Connector DP



TrueLine Interalu SAPP bracket DT



TrueLine Interalu KLIMA bracket

General Information

Number of gear units	1 unit
Driver included	Yes
Service tag	Yes

Light Technical

Color rendering index (CRI)	>90
Beam angle of light source	120 degree(s)
Optic type	Wide beam

Operating and Electrical

Line Frequency	50 to 60 Hz
Suitable for random switching	Yes
Protection class IEC	Safety class I

Controls and Dimming

Dimmable	Yes
Embedded control	Upgradable sensor slot with SC200 sensor

Mechanical and Housing

Housing Color	Black
Ingress protection code	IP20 [Finger-protected]
Mech. impact protection code	IK03 [0.3 J]

Approval and Application

Glow-wire test	Temperature 650 °C, duration 30 s
Flammability mark	For mounting on normally flammable surfaces
CE mark	Yes
ENEC mark	ENEC mark
Ambient temperature range	0 to +35 °C

Initial Performance (IEC Compliant)

Luminous flux tolerance	+/-10%

Product Data

Product family code	RC536B [TrueLine Interalu]

Light Technical

Order Code	Full Product Name	Luminous Flux	Correlated Color Temperature (Nom)	Luminous Efficacy (rated) (Nom)
910505105525	RC536B 25S/940 PSD W5L113KLIMA W5-M/F BK	2,500 lm	4000 K	138 lm/W
910505105526	RC536B 25S/930 PSD W5L113KLIMA W5-M/F BK	2,500 lm	3000 K	135 lm/W
910505105527	RC536B 34S/940 PSD W5L113KLIMA W5-M/F BK	3,400 lm	4000 K	139 lm/W
910505105528	RC536B 34S/930 PSD W5L113KLIMA W5-M/F BK	3,400 lm	3000 K	131 lm/W
910505105529	RC536B 40S/940 PSD W5L113KLIMA W5-M/F BK	4,000 lm	4000 K	138 lm/W
910505105530	RC536B 40S/930 PSD W5L113KLIMA W5-M/F BK	4,000 lm	3000 K	131 lm/W
910505105513	RC536B 25S/940 PSD W5L113 SAPP W5-M/F BK	2,500 lm	4000 K	138 lm/W
910505105514	RC536B 25S/930 PSD W5L113 SAPP W5-M/F BK	2,500 lm	3000 K	135 lm/W
910505105515	RC536B 34S/940 PSD W5L113 SAPP W5-M/F BK	3,400 lm	4000 K	139 lm/W
910505105516	RC536B 34S/930 PSD W5L113 SAPP W5-M/F BK	3,400 lm	3000 K	131 lm/W
910505105517	RC536B 40S/940 PSD W5L113 SAPP W5-M/F BK	4,000 lm	4000 K	138 lm/W
910505105518	RC536B 40S/930 PSD W5L113 SAPP W5-M/F BK	4,000 lm	3000 K	131 lm/W
910505105531	RC536B 20S/940 PSD W5L57 KLIMA W5-M/F BK	2,000 lm	4000 K	108 lm/W
910505105532	RC536B 20S/930 PSD W5L57 KLIMA W5-M/F BK	2,000 lm	3000 K	108 lm/W
910505105738	RC536B 20S/940 SRD W5L61SAPP U4W3-M/F BK	2,000 lm	4000 K	108 lm/W
910505105739	RC536B 20S/930 SRD W5L61SAPP U4W3-M/F BK	2,000 lm	3000 K	108 lm/W
910505105742	RC536B 20S/940SRD W5L61KLIMA U4W3-M/F BK	2,000 lm	4000 K	108 lm/W
910505105743	RC536B 20S/930SRD W5L61KLIMA U4W3-M/F BK	2,000 lm	3000 K	108 lm/W
910505105519	RC536B 20S/940 PSD W5L57 SAPP W5-M/F BK	2,000 lm	4000 K	108 lm/W

Order Code	Full Product Name	Luminous Flux	Correlated Color Temperature (Nom)	Luminous Efficacy (rated) (Nom)
910505105520	RC536B 20S/930 PSD W5L57 SAPP W5-M/F BK	2,000 lm	3000 K	108 lm/W
910505105736	RC536B 40S/940SRD W5L117SAPP U4W3-M/F BK	4,000 lm	4000 K	143 lm/W
910505105737	RC536B 40S/930SRD W5L117SAPP U4W3-M/F BK	4,000 lm	3000 K	143 lm/W
910505105740	RC536B 40S/940SRD W5L117KLIMA U4W3-M/FBK	4,000 lm	4000 K	143 lm/W
910505105741	RC536B 40S/930SRD W5L117KLIMA U4W3-M/FBK	4,000 lm	3000 K	143 lm/W

Operating and Electrical

Order Code	Full Product Name	Input Voltage	Power Consumption
910505105525	RC536B 25S/940 PSD W5L113KLIMA W5-M/F BK	220-240 V	18 W
910505105526	RC536B 25S/930 PSD W5L113KLIMA W5-M/F BK	220-240 V	17.8 W
910505105527	RC536B 34S/940 PSD W5L113KLIMA W5-M/F BK	220-240 V	24.5 W
910505105528	RC536B 34S/930 PSD W5L113KLIMA W5-M/F BK	220-240 V	24.5 W
910505105529	RC536B 40S/940 PSD W5L113KLIMA W5-M/F BK	220-240 V	29 W
910505105530	RC536B 40S/930 PSD W5L113KLIMA W5-M/F BK	220-240 V	29 W
910505105513	RC536B 25S/940 PSD W5L113 SAPP W5-M/F BK	220-240 V	18 W
910505105514	RC536B 25S/930 PSD W5L113 SAPP W5-M/F BK	220-240 V	17.8 W
910505105515	RC536B 34S/940 PSD W5L113 SAPP W5-M/F BK	220-240 V	24.5 W
910505105516	RC536B 34S/930 PSD W5L113 SAPP W5-M/F BK	220-240 V	24.5 W
910505105517	RC536B 40S/940 PSD W5L113 SAPP W5-M/F BK	220-240 V	29 W
910505105518	RC536B 40S/930 PSD W5L113 SAPP W5-M/F BK	220-240 V	29 W
910505105531	RC536B 20S/940 PSD W5L57 KLIMA W5-M/F BK	220-240 V	18.5 W
910505105532	RC536B 20S/930 PSD W5L57 KLIMA W5-M/F BK	220-240 V	18.5 W
910505105738	RC536B 20S/940 SRD W5L61SAPP U4W3-M/F BK	220 to 240 V	18.5 W
910505105739	RC536B 20S/930 SRD W5L61SAPP U4W3-M/F BK	220 to 240 V	18.5 W
910505105742	RC536B 20S/940SRD W5L61KLIMA U4W3-M/F BK	220 to 240 V	18.5 W
910505105743	RC536B 20S/930SRD W5L61KLIMA U4W3-M/F BK	220 to 240 V	18.5 W
910505105519	RC536B 20S/940 PSD W5L57 SAPP W5-M/F BK	220-240 V	18.5 W
910505105520	RC536B 20S/930 PSD W5L57 SAPP W5-M/F BK	220-240 V	18.5 W
910505105736	RC536B 40S/940SRD W5L117SAPP U4W3-M/F BK	220 to 240 V	28 W
910505105737	RC536B 40S/930SRD W5L117SAPP U4W3-M/F BK	220 to 240 V	28 W
910505105740	RC536B 40S/940SRD W5L117KLIMA U4W3-M/FBK	220 to 240 V	28 W
910505105741	RC536B 40S/930SRD W5L117KLIMA U4W3-M/FBK	220 to 240 V	28 W

Initial Performance (IEC Compliant)

Order Code	Full Product Name	Initial chromaticity
910505105525	RC536B 25S/940 PSD W5L113KLIMA W5-M/F BK	(0.38, 0.38) SDCM <3
910505105526	RC536B 25S/930 PSD W5L113KLIMA W5-M/F BK	(0.43, 0.40) SDCM <3
910505105527	RC536B 34S/940 PSD W5L113KLIMA W5-M/F BK	(0.38, 0.38) SDCM <3
910505105528	RC536B 34S/930 PSD W5L113KLIMA W5-M/F BK	(0.43, 0.40) SDCM <3
910505105529	RC536B 40S/940 PSD W5L113KLIMA W5-M/F BK	(0.38, 0.38) SDCM <3

Order Code	Full Product Name	Initial chromaticity
910505105530	RC536B 40S/930 PSD W5L113KLIMA W5-M/F BK	(0.43, 0.40) SDCM <3
910505105513	RC536B 25S/940 PSD W5L113 SAPP W5-M/F BK	(0.38, 0.38) SDCM <3
910505105514	RC536B 25S/930 PSD W5L113 SAPP W5-M/F BK	(0.43, 0.40) SDCM <3
910505105515	RC536B 34S/940 PSD W5L113 SAPP W5-M/F BK	(0.38, 0.38) SDCM <3
910505105516	RC536B 34S/930 PSD W5L113 SAPP W5-M/F BK	(0.43, 0.40) SDCM <3
910505105517	RC536B 40S/940 PSD W5L113 SAPP W5-M/F BK	(0.38, 0.38) SDCM <3
910505105518	RC536B 40S/930 PSD W5L113 SAPP W5-M/F BK	(0.43, 0.40) SDCM <3
910505105531	RC536B 20S/940 PSD W5L57 KLIMA W5-M/F BK	(0.38, 0.38) SDCM <3
910505105532	RC536B 20S/930 PSD W5L57 KLIMA W5-M/F BK	(0.43, 0.40) SDCM <3
910505105738	RC536B 20S/940 SRD W5L61SAPP U4W3-M/F BK	(0.38, 0.38) SDCM <3
910505105739	RC536B 20S/930 SRD W5L61SAPP U4W3-M/F BK	(0.43, 0.40) SDCM <3
910505105742	RC536B 20S/940SRD W5L61KLIMA U4W3-M/F BK	(0.38, 0.38) SDCM <3
910505105743	RC536B 20S/930SRD W5L61KLIMA U4W3-M/F BK	(0.43, 0.40) SDCM <3
910505105519	RC536B 20S/940 PSD W5L57 SAPP W5-M/F BK	(0.38, 0.38) SDCM <3
910505105520	RC536B 20S/930 PSD W5L57 SAPP W5-M/F BK	(0.43, 0.40) SDCM <3
910505105736	RC536B 40S/940SRD W5L117SAPP U4W3-M/F BK	(0.38, 0.38) SDCM <3
910505105737	RC536B 40S/930SRD W5L117SAPP U4W3-M/F BK	(0.43, 0.40) SDCM <3
910505105740	RC536B 40S/940SRD W5L117KLIMA U4W3-M/FBK	(0.38, 0.38) SDCM <3
910505105741	RC536B 40S/930SRD W5L117KLIMA U4W3-M/FBK	(0.43, 0.40) SDCM <3

© 2026 Signify Holding. All rights reserved. The information provided herein is subject to change, without notice. Signify does not give any representation or warranty as to the accuracy or completeness of the information included herein and shall not be liable for any action in reliance thereon. The information presented in this document is not intended as any commercial offer and does not form part of any quotation or contract, unless otherwise agreed by Signify. Philips and the Philips Shield Emblem are registered trademarks of Koninklijke Philips N.V.