PHILIPS

EM164C SM TWIN SPOT NM3 ELP IP65

912401483513



Emergency Twin Spot, 9 W, 9 W, 300x287.5mm; H68.5 mm, 1000 lm, 6500 K, IP65, ELB3h, Non-maintained

300x287.5mm; H68.5 mm, Polycarbonate, White, Signal white (RAL9003), 1000 lm, 9 W, 111 lm/W, 6500 K, 0.33, Ribbed, UV stabilized Polycarbonate cover, IP65 | Dust penetration-protected, jet-proof, IK07 | 2 J reinforced, Safety class II, Push-in connector 2-pole, Emergency lighting 3 hours duration basic version

General Information

Lamp family code	-
Number of gear units	1 unit
Driver included	Yes
Sustainability rating	Unclassified
Light source engine type	LED
Service tag	No
Warranty period	5 years

Light Technical

Upward light output ratio	3.71
Luminous Flux	1,000 lm
Correlated Color Temperature (Nom)	6500 K
Luminous Efficacy (rated) (Nom)	111 lm/W
Color rendering index (CRI)	>80
Light source color	6500
Optic type	-
Luminaire light beam spread	120°
Optic type outdoor	-
Effective projected area	16 m^2

Operating and Electrical

Input Voltage	220-240 V
Line Frequency	50 Hz

Initial CLO power consumption	9 W
Average CLO power consumption	9 W
End CLO power consumption	9 W
Inrush current	3.95 A
Inrush time	100 ms
Power Consumption	9 W
Power Factor (Fraction)	0.4
Connection	Push-in connector 2-pole
Cable	-
Number of products on MCB of 16 A type B	189
Suitable for random switching	Not applicable
Protection class IEC	Safety class II

Controls and Dimming

Dimmable	No
Driver/power unit/transformer	-
Control interface	Internal (no external connection)
Constant light output	No
Maximum dim level	Not applicable
Embedded control	-

Mechanical and Housing

Housing Material	Polycarbonate
Reflector material	-
Optic material	Polycarbonate
Optical cover material	UV stabilized Polycarbonate cover
Fixation material	-
Housing Color	White
Mounting device	-
Optical cover finish	Ribbed
Reflector Finish	-
Overall length	300 mm
Overall width	288 mm
Overall height	69 mm
Dimensions (Height x Width x Depth)	69 x 288 x 300 mm
Parts color	All parts colored
Ingress protection code	IP65 [Dust penetration-protected, jet-proof]
Mech. impact protection code	IK07 [2 J reinforced]
Standard tilt angle posttop	0°
Standard tilt angle side entry	0°
Optical cover type	-
Net Weight (Piece)	1.267 kg

Emergency Operation

Emergency flux	1,000 lm
Rated duration of the emergency lighting (when fully charged)	3 hour(s)
Additional max. power consumption when emergency battery is charging	9 W
Central Emergency	No
Emergency lighting	Emergency lighting 3 hours duration basic version
Emergency function testing method	Manual / Test button
Emergency lighting operation mode	Non-maintained

Approval and Application

Glow-wire test	-
Flammability mark	-
CE mark	Yes
ENEC mark	-
Photobiological risk	Photobiological risk group 0 @ 200mm to EN62471
Photobiological risk specification	0 m
EU RoHS compliant	Yes
Performance ambient temperature Tq	25 °C
Ambient temperature range	+5 to +45 °C

Initial Performance (IEC Compliant)

Luminous flux tolerance	+/-5%
Initial chromaticity	0.33
Power consumption tolerance	+/-10%
Init. Color Rendering Index Tolerance	+/-2

Over Time Performance (IEC Compliant)

Control gear failure rate at median useful life 35000 h	5 %
Control gear failure rate at median useful life 50000 h	10 %
Control gear failure rate at median useful life 75000 h	25 %
Control gear failure rate at median useful life 100000 h	50 %
Lumen maintenance (EN-IEC 62722-2-1) at median useful life* 35000 h	L85
Lumen maintenance (EN-IEC 62722-2-1) at median useful life* 50000 h	L85
Lumen maintenance (EN-IEC 62722-2-1) at median useful life* 75000 h	L85
Lumen maintenance (EN-IEC 62722-2-1) at median useful life* 100000 h	L85

Product Data

Order product name	EM164C SM TWIN SPOT NM3 ELP IP65
Full product name	EM164C SM TWIN SPOT NM3 ELP IP65
Full product code	871869979898700
Order code	912401483513
Material Nr. (12NC)	912401483513
Numerator - Quantity Per Pack	1
EAN/UPC - Product/Case	8718699798987
Numerator - Packs per outer box	10
EAN/UPC - Case	8718699799960

Sustainability Data

Repair class	Repair Class D, this product is not designed to be repaired.
Non-virgin material ratio of the packaging	Cardboard > 80% recycled
Packaging Recyclable content ratio	Cardboard recycling rate > 80%
Packaging Material	Cardboard

Dimensional drawing

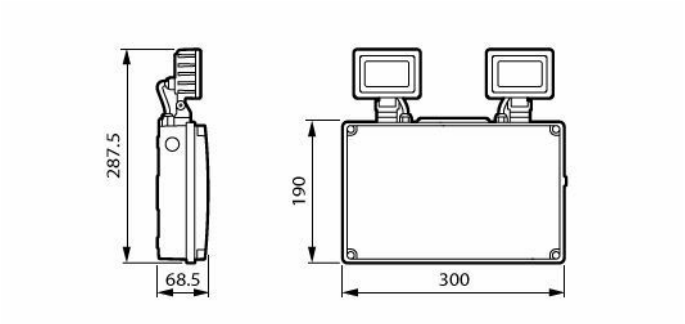

Related Documents

Documents and certificates	Document Name	Download
Installation Instructions	EM164C-SM-TWIN-SPOT-UI.pdf	Download

Photometry and lighting design	Document Name	Download
IES File	EM164C-SM-TWIN-SPOT-NM3-ELB-IP65-912401483513.ies	Download

© 2026 Signify Holding. All rights reserved. The information provided herein is subject to change, without notice. Signify does not give any representation or warranty as to the accuracy or completeness of the information included herein and shall not be liable for any action in reliance thereon. The information presented in this document is not intended as any commercial offer and does not form part of any quotation or contract, unless otherwise agreed by Signify. Philips and the Philips Shield Emblem are registered trademarks of Koninklijke Philips N.V.