PHILIPS

GreenSpace Evo Mini Adjustable

RS321B



A sustainable spot in a small and subtle design

GreenSpace Evo Mini Adjustable is a miniaturized accent spot with a subtle and neutral design which can be aimed up to 30 degrees. This makes the product an ideal choice for fashion, hospitality and residential applications. The 3D printed housing is crafted from at least 65% recycled or bio-circular materials, while the heatsink is made from 85% recycled aluminium. Because of its circular design, the luminaire is upgradable, reusable, fully serviceable and recyclable. Combined with the high energy efficiency, this makes the GreenSpace Evo Mini Adjustable a sustainable choice for accent lighting. The PerfectAccent deep reflectors ensure a light effect with increased sparkle and improved shopper eye comfort. Renovation projects are easy with Perfect Fit due to the multiple cutout dimensions that are available. Further customization of colors, textures and Perfect Fit cutouts is possible via Philips MyCreation

Benefits

- Blends into stores with a clean and neutral design
- Easy to aim the light up to 30 degrees
- Retrofitting older installations is easy with Perfect Fit's multiple available cutout options
- More sparkle and enhanced shopper eye comfort with PerfectAccent deep reflectors
- Extend the useful life of the product with easy serviceability and upgradeability
- The recycled materials and high energy efficiency help further reduce the carbon footprint of the product

Applications

- Fashion
- Hospitality
- Residential

Features

- Easy access to the optics, LED and front glass
- Serviceable and upgradeable with standard tools
- Available in multiple Perfect Fit cutout dimensions (80mm-100mm)
- Reduced carbon footprint due to high efficacy
- Equipped with state-of-the-art PerfectAccent deep reflectors
- Connectivity options: Interact compatible DALI (DIA) and Wireless (WIA)
- Optional front glass (recommended for dusty environments)

Versions



RS321B GreenSpace Evo Mini adjustable white

Dimensional drawing

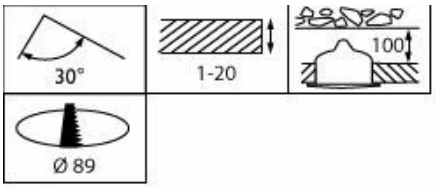

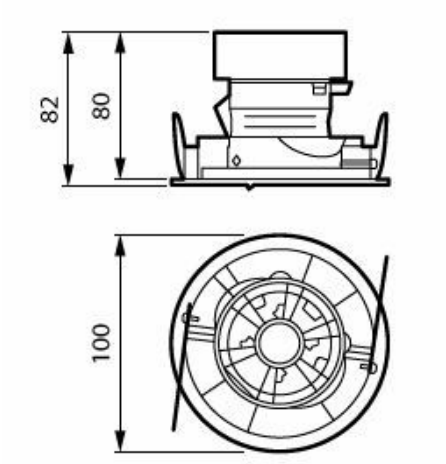

RS321B 7S/830 PSU-E HWB WH

- Cleaning of the optic should only be done with pressurized air. Touching the LED or reflector is forbidden. For food preparation areas and areas with high levels of dust, the use of the optional front glass is strongly advised, as it can be cleaned with a (dry) microfiber cloth
- During maintenance, the product must be switched off and cooled down
- The product must be installed out of arm's reach. Manipulating the product when hot is only possible with an insulated glove

Product details



RS321B GreenSpace Evo Mini adjustable white

General Information

Light source replaceable	Yes
Number of gear units	1 unit
Driver included	Yes
Service tag	Yes

Light Technical

Correlated Color Temperature (Nom)	3000 K
Color rendering index (CRI)	>80
Optic type	High-reflective metal reflector Wide beam 40 to 80 degrees

Operating and Electrical

Input Voltage	220-240 V
Line Frequency	50 to 60 Hz
Suitable for random switching	Yes
Protection class IEC	Safety class II

Controls and Dimming

Dimmable	No

Mechanical and Housing

Housing Color	White
Ingress protection code	IP20 [Finger-protected]
Mech. impact protection code	IK02 [0.2 J standard]

Emergency Operation

Central Emergency	No

Approval and Application

Glow-wire test	Temperature 650 °C, duration 30 s
Flammability mark	-
CE mark	Yes
ENEC mark	ENEC mark
Stroboscopic effect visibility measure (SVM)	0.4
Ambient temperature range	+10 to +35 °C

Initial Performance (IEC Compliant)

Luminous flux tolerance	+/-10%
Initial chromaticity	(0.434, 0.403) SDCM <3

Product Data

Product family code	RS321B [GreenSpace Evo Mini Adjustable]

Light Technical

Order Code	Full Product Name	Luminous Flux	Luminous Efficacy (rated) (Nom)
910505104584	RS321B 7S/830 PSU-E HWB WH	780 lm	115 lm/W
910505104588	RS321B 12S/830 PSU-E HWB WH	1,150 lm	134 lm/W

Operating and Electrical

Order Code	Full Product Name	Power Consumption
910505104584	RS321B 7S/830 PSU-E HWB WH	6.8 W
910505104588	RS321B 12S/830 PSU-E HWB WH	8.6 W

Polar normal diagrams

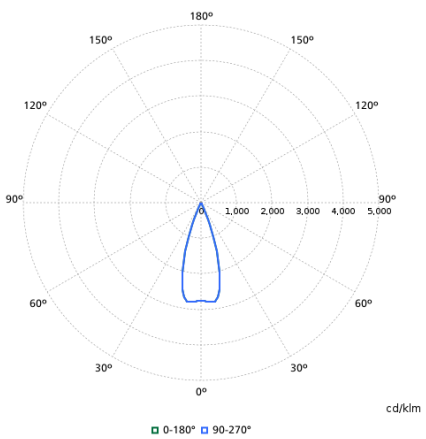

RS321B 12S/830 PSU-E HWB WH
910505104588

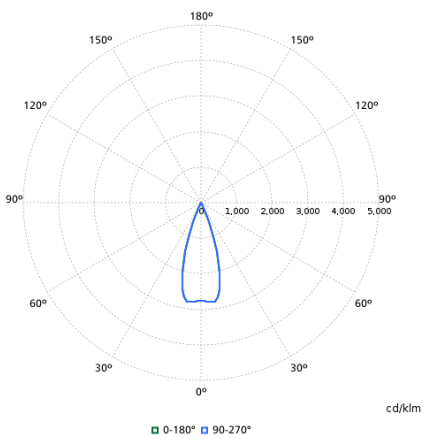

RS321B 7S/830 PSU-E HWB WH
910505104584

© 2026 Signify Holding. All rights reserved. The information provided herein is subject to change, without notice. Signify does not give any representation or warranty as to the accuracy or completeness of the information included herein and shall not be liable for any action in reliance thereon. The information presented in this document is not intended as any commercial offer and does not form part of any quotation or contract, unless otherwise agreed by Signify. Philips and the Philips Shield Emblem are registered trademarks of Koninklijke Philips N.V.