PHILIPS

GreenUp Round Highbay

BY518P

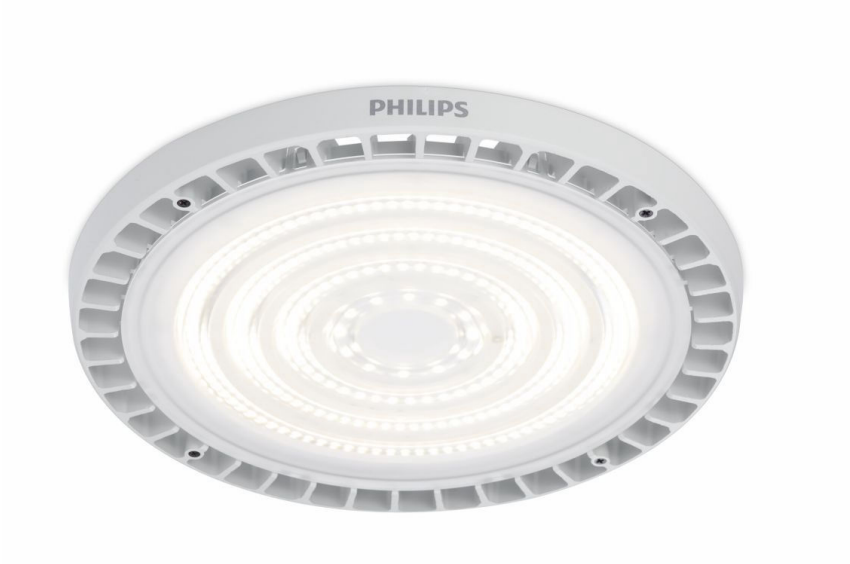

Classic, economical and reliable highbay luminaire

The GreenUp Round Highbay range of luminaires provides the optimal balance between basic performance and price. The family covers a wide product range with a variety of options, competitive specifications, and long-term quality and reliability. The range is suitable for most industrial applications.

Benefits

- Excellent energy savings, great value for money
- High light quality with a range of lumen packages for different applications
- Robust and reliable

Applications

- Manufacturing
- Warehouse

Features

- 140 lm/W system efficacy
- Narrow and wide beam options
- IP65/IK06 protection
- 50,000 hours lifetime @Ta 35^{0}C
- -20^{0}C to 45^{0}C working temperature

Versions



GreenUp-Round-Highbay-Additional-Product-Photo-BY518P-SE



Size S



GreenUp Round Highbay BY518P LED260



GreenUp Round Highbay



Size L



GreenUp Round Highbay BY518P LED300



Size XS



Size Mf



GreenUp Round Highbay BY518P LED210

Dimensional drawing

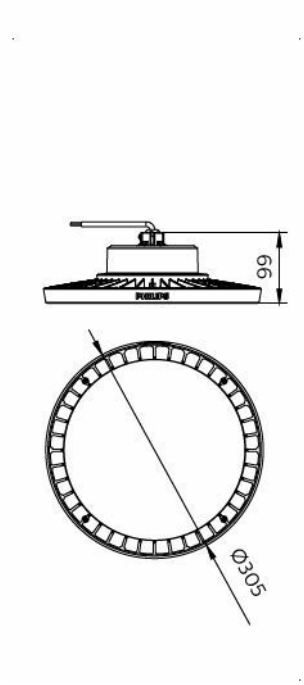

BY518P LED210/CW PSU WB GC

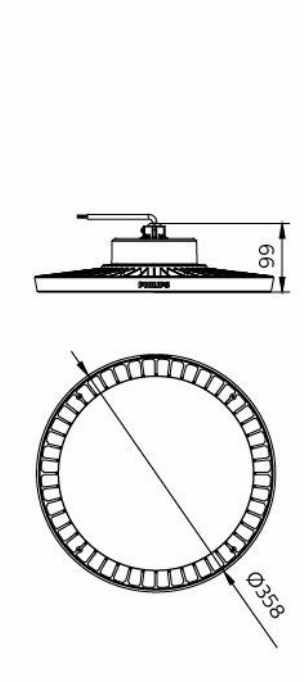

GreenUp Round Highbay BY518P LED260

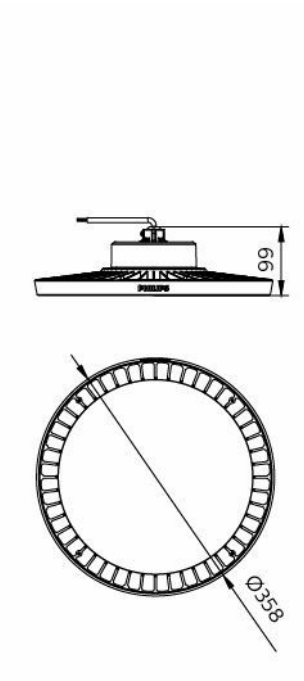

BY518P G2 LED260/CW PSU 220-240 NB LA

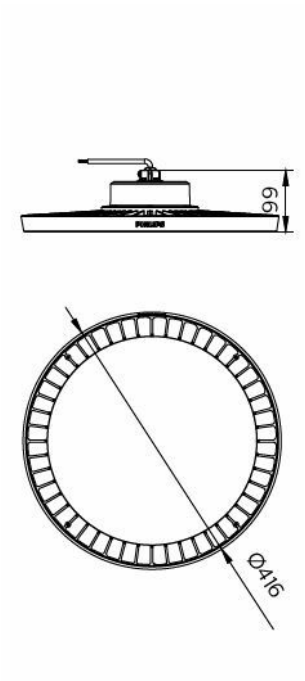

BY518P LED300/CW PSU WB GM

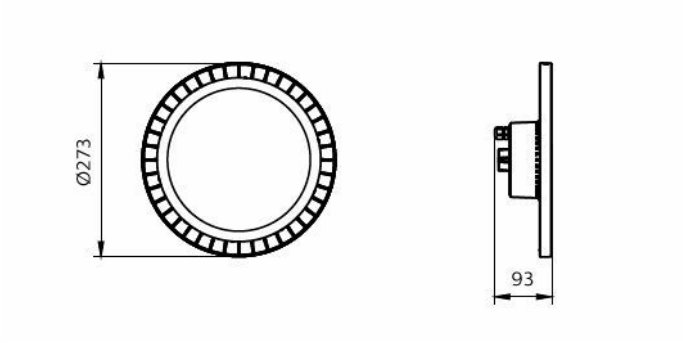

BY518P SE LED70/NW PSU WB

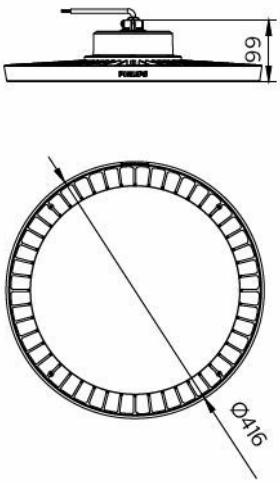

GreenUp Round Highbay BY518P LED300

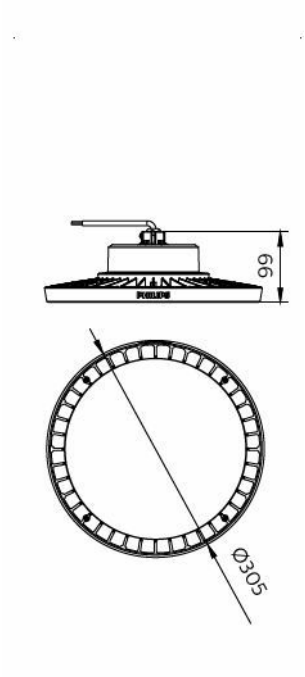

GreenUp Round Highbay BY518P LED210

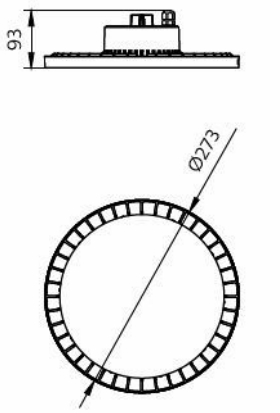

BY518P SE LED140/NW PSU WB GM

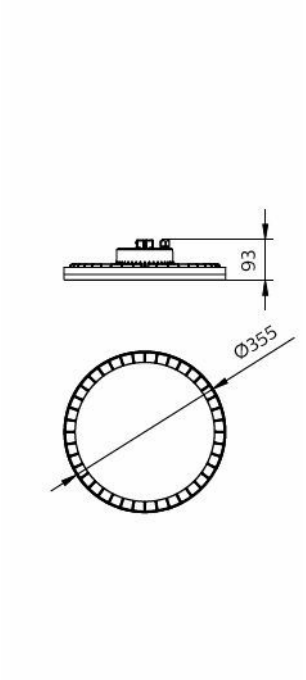

BY518P SE LED245/NW PSU WB GC

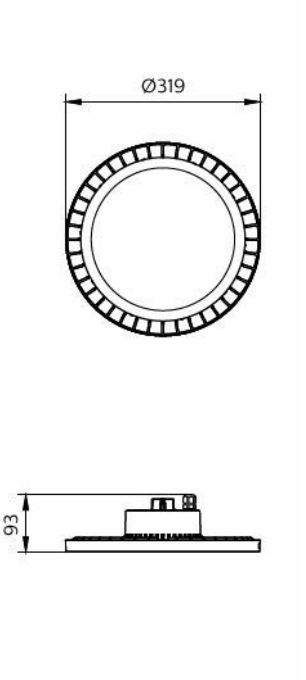

BY518P SE LED200/CW PSU WB GM

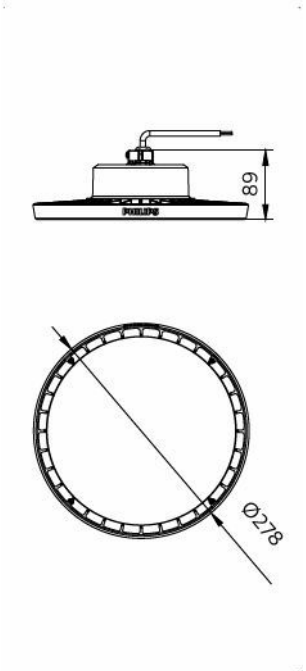

BY518P LED160/CW PSU WB GC

General Information

Number of gear units	1 unit
Gear	-
Driver included	Yes
Service tag	Yes

Light Technical

Number of light sources	1
Beam angle of light source	120 degree(s)
Optic type	Wide beam

Operating and Electrical

Line Frequency	50 or 60 Hz
Suitable for random switching	No
Protection class IEC	Safety class I

Controls and Dimming

Dimmable	No
Maximum dim level	Not applicable

Mechanical and Housing

Ingress protection code	IP65 [Dust penetration-protected, jet-proof]
Mech. impact protection code	IK06 [1 J]
Optical cover type	Lens

Approval and Application

Glow-wire test	-
Flammability mark	-
ENEC mark	-

Initial Performance (IEC Compliant)

Luminous flux tolerance	+/-10%

Light Technical

Order Code	Full Product Name	Luminous Flux	Correlated Color Temperature (Nom)	Luminous Efficacy (rated) (Nom)	Color rendering index (CRI)
911401588745	BY518P SE LED50/NW PSU WB	5,000 lm	4000 K	163 lm/W	>80
911401588845	BY518P SE LED50/CW PSU WB	5,000 lm	6500 K	163 lm/W	>80
911401588945	BY518P SE LED70/NW PSU WB	7,000 lm	4000 K	159 lm/W	>80
911401589045	BY518P SE LED70/CW PSU WB	7,000 lm	6500 K	159 lm/W	>80
911401646407	BY518P LED210/NW PSU WB GC	21,000 lm	4000 K	137 lm/W	>80
911401646507	BY518P LED210/CW PSU WB GC	21,000 lm	6500 K	137 lm/W	>80
911401647007	BY518P LED210/NW PSU NB GC	21,000 lm	4000 K	137 lm/W	>80
911401647107	BY518P LED210/CW PSU NB GC	21,000 lm	6500 K	137 lm/W	>80
911401647607	BY518P LED210/NW PSU WB GM	21,000 lm	4000 K	137 lm/W	>80

Order Code	Full Product Name	Luminous Flux	Correlated Color Temperature (Nom)	Luminous Efficacy (rated) (Nom)	Color rendering index (CRI)
911401647707	BY518P LED210/CW PSU WB GM	21,000 lm	6500 K	137 lm/W	>80
911401648307	BY518P LED210/CW PSU NB GM	21,000 lm	6500 K	137 lm/W	>80
911401650407	BY518P G2 LED210/CW PSU 220-240 WB LA	21,000 lm	6500 K	137 lm/W	>80
911401650507	BY518P G2 LED210/CW PSU 220-240 NB LA	21,000 lm	6500 K	137 lm/W	>80
911401645208	BY518P LED260/NW PSU WB CAU CL	26,000 lm	4000 K	139 lm/W	≥80
911401676808	BY518P SE LED105/NW PSU WB GC	10,500 lm	4000 K	150 lm/W	>80
911401676908	BY518P SE LED105/CW PSU WB GC	10,500 lm	6500 K	150 lm/W	>80
911401677008	BY518P SE LED140/NW PSU WB GC	14,000 lm	4000 K	143 lm/W	>80
911401677108	BY518P SE LED140/CW PSU WB GC	14,000 lm	6500 K	143 lm/W	>80
911401677208	BY518P SE LED200/NW PSU WB GC	20,000 lm	4000 K	148 lm/W	>80
911401677308	BY518P SE LED200/CW PSU WB GC	20,000 lm	6500 K	148 lm/W	>80
911401677408	BY518P SE LED245/NW PSU WB GC	24,500 lm	4000 K	153 lm/W	>80
911401677508	BY518P SE LED245/CW PSU WB GC	24,500 lm	6500 K	153 lm/W	>80
911401677608	BY518P SE LED290/NW PSU WB GC	29,000 lm	4000 K	151 lm/W	>80
911401677708	BY518P SE LED290/CW PSU WB GC	29,000 lm	6500 K	151 lm/W	>80
911401677808	BY518P SE LED105/NW PSU WB GM	10,500 lm	4000 K	150 lm/W	>80
911401677908	BY518P SE LED105/CW PSU WB GM	10,500 lm	6500 K	150 lm/W	>80
911401678008	BY518P SE LED140/NW PSU WB GM	14,000 lm	4000 K	143 lm/W	>80
911401678108	BY518P SE LED140/CW PSU WB GM	14,000 lm	6500 K	143 lm/W	>80
911401678208	BY518P SE LED200/NW PSU WB GM	20,000 lm	4000 K	148 lm/W	>80
911401678308	BY518P SE LED200/CW PSU WB GM	20,000 lm	6500 K	148 lm/W	>80
911401678408	BY518P SE LED245/NW PSU WB GM	24,500 lm	4000 K	153 lm/W	>80
911401678508	BY518P SE LED245/CW PSU WB GM	24,500 lm	6500 K	153 lm/W	>80
911401678608	BY518P SE LED290/NW PSU WB GM	29,000 lm	4000 K	151 lm/W	>80
911401678708	BY518P SE LED290/CW PSU WB GM	29,000 lm	6500 K	151 lm/W	>80
911401647507	BY518P LED300/CW PSU NB GC	30,000 lm	6500 K	143 lm/W	>80
911401648107	BY518P LED300/CW PSU WB GM	30,000 lm	6500 K	143 lm/W	>80
911401648707	BY518P LED300/CW PSU NB GM	30,000 lm	6500 K	143 lm/W	>80
911401650807	BY518P G2 LED300/CW PSU 220-240 WB LA	30,000 lm	6500 K	143 lm/W	>80
911401650907	BY518P G2 LED300/CW PSU 220-240 NB LA	30,000 lm	6500 K	143 lm/W	>80
911401645308	BY518P LED300/NW PSU WB CAU CL	30,000 lm	4000 K	145 lm/W	≥80
911401671207	BY518P LED110/NW PSU WB GC	11,000 lm	4000 K	143 lm/W	>80
911401671307	BY518P LED110/CW PSU WB GC	11,000 lm	6500 K	143 lm/W	>80
911401671407	BY518P LED160/NW PSU WB GC	16,000 lm	4000 K	139 lm/W	>80
911401671507	BY518P LED160/CW PSU WB GC	16,000 lm	6500 K	139 lm/W	>80
911401671607	BY518P LED110/NW PSU NB GC	11,000 lm	4000 K	143 lm/W	>80
911401671707	BY518P LED110/CW PSU NB GC	11,000 lm	6500 K	143 lm/W	>80
911401671807	BY518P LED160/NW PSU NB GC	16,000 lm	4000 K	139 lm/W	>80
911401672007	BY518P LED110/NW PSU WB GM	11,000 lm	4000 K	143 lm/W	>80
911401672107	BY518P LED110/CW PSU WB GM	11,000 lm	6500 K	143 lm/W	>80
911401672207	BY518P LED160/NW PSU WB GM	16,000 lm	4000 K	139 lm/W	>80
911401672307	BY518P LED160/CW PSU WB GM	16,000 lm	6500 K	139 lm/W	>80

Order Code	Full Product Name	Luminous Flux	Correlated Color Temperature (Nom)	Luminous Efficacy (rated) (Nom)	Color rendering index (CRI)
911401672507	BY518P LED110/CW PSU NB GM	11,000 lm	6500 K	143 lm/W	>80
911401672707	BY518P LED160/CW PSU NB GM	16,000 lm	6500 K	139 lm/W	>80
911401674407	BY518P G2 LED110/CW PSU 220-240 WB LA	11,000 lm	6500 K	143 lm/W	>80
911401674607	BY518P G2 LED160/CW PSU 220-240 WB LA	16,000 lm	6500 K	139 lm/W	>80
911401646607	BY518P LED260/NW PSU WB GC	26,000 lm	4000 K	139 lm/W	>80
911401646707	BY518P LED260/CW PSU WB GC	26,000 lm	6500 K	139 lm/W	>80
911401647207	BY518P LED260/NW PSU NB GC	26,000 lm	4000 K	139 lm/W	>80
911401647807	BY518P LED260/NW PSU WB GM	26,000 lm	4000 K	139 lm/W	>80
911401647907	BY518P LED260/CW PSU WB GM	26,000 lm	6500 K	139 lm/W	>80
911401650607	BY518P G2 LED260/CW PSU 220-240 WB LA	26,000 lm	6500 K	139 lm/W	>80
911401650707	BY518P G2 LED260/CW PSU 220-240 NB LA	26,000 lm	6500 K	139 lm/W	>80
911401645108	BY518P LED210/NW PSU WB CAU CL	21,000 lm	4000 K	136 lm/W	≥80

Operating and Electrical

Order Code	Full Product Name	Input Voltage	Power Consumption
911401588745	BY518P SE LED50/NW PSU WB	220-240 V	30.5 W
911401588845	BY518P SE LED50/CW PSU WB	220-240 V	30.5 W
911401588945	BY518P SE LED70/NW PSU WB	220-240 V	44 W
911401589045	BY518P SE LED70/CW PSU WB	220-240 V	44 W
911401646407	BY518P LED210/NW PSU WB GC	220-240 V	154 W
911401646507	BY518P LED210/CW PSU WB GC	220-240 V	154 W
911401647007	BY518P LED210/NW PSU NB GC	220-240 V	154 W
911401647107	BY518P LED210/CW PSU NB GC	220-240 V	154 W
911401647607	BY518P LED210/NW PSU WB GM	220-240 V	154 W
911401647707	BY518P LED210/CW PSU WB GM	220-240 V	154 W
911401648307	BY518P LED210/CW PSU NB GM	220-240 V	154 W
911401650407	BY518P G2 LED210/CW PSU 220-240 WB LA	220-240 V	154 W
911401650507	BY518P G2 LED210/CW PSU 220-240 NB LA	220-240 V	154 W
911401645208	BY518P LED260/NW PSU WB CAU CL	220-240 V	187 W
911401676808	BY518P SE LED105/NW PSU WB GC	220 to 240 V	70 W
911401676908	BY518P SE LED105/CW PSU WB GC	220 to 240 V	70 W
911401677008	BY518P SE LED140/NW PSU WB GC	220 to 240 V	98 W
911401677108	BY518P SE LED140/CW PSU WB GC	220 to 240 V	98 W
911401677208	BY518P SE LED200/NW PSU WB GC	220 to 240 V	135 W
911401677308	BY518P SE LED200/CW PSU WB GC	220 to 240 V	135 W
911401677408	BY518P SE LED245/NW PSU WB GC	220 to 240 V	160 W
911401677508	BY518P SE LED245/CW PSU WB GC	220 to 240 V	160 W
911401677608	BY518P SE LED290/NW PSU WB GC	220 to 240 V	192 W
911401677708	BY518P SE LED290/CW PSU WB GC	220 to 240 V	192 W
911401677808	BY518P SE LED105/NW PSU WB GM	220 to 240 V	70 W

Order Code	Full Product Name	Input Voltage	Power Consumption
911401677908	BY518P SE LED105/CW PSU WB GM	220 to 240 V	70 W
911401678008	BY518P SE LED140/NW PSU WB GM	220 to 240 V	98 W
911401678108	BY518P SE LED140/CW PSU WB GM	220 to 240 V	98 W
911401678208	BY518P SE LED200/NW PSU WB GM	220 to 240 V	135 W
911401678308	BY518P SE LED200/CW PSU WB GM	220 to 240 V	135 W
911401678408	BY518P SE LED245/NW PSU WB GM	220 to 240 V	160 W
911401678508	BY518P SE LED245/CW PSU WB GM	220 to 240 V	160 W
911401678608	BY518P SE LED290/NW PSU WB GM	220 to 240 V	192 W
911401678708	BY518P SE LED290/CW PSU WB GM	220 to 240 V	192 W
911401647507	BY518P LED300/CW PSU NB GC	220-240 V	207 W
911401648107	BY518P LED300/CW PSU WB GM	220-240 V	207 W
911401648707	BY518P LED300/CW PSU NB GM	220-240 V	207 W
911401650807	BY518P G2 LED300/CW PSU 220-240 WB LA	220-240 V	207 W
911401650907	BY518P G2 LED300/CW PSU 220-240 NB LA	220-240 V	207 W
911401645308	BY518P LED300/NW PSU WB CAU CL	220-240 V	207 W
911401671207	BY518P LED110/NW PSU WB GC	220-240 V	77 W
911401671307	BY518P LED110/CW PSU WB GC	220-240 V	77 W
911401671407	BY518P LED160/NW PSU WB GC	220-240 V	115 W
911401671507	BY518P LED160/CW PSU WB GC	220-240 V	115 W
911401671607	BY518P LED110/NW PSU NB GC	220-240 V	77 W
911401671707	BY518P LED110/CW PSU NB GC	220-240 V	77 W
911401671807	BY518P LED160/NW PSU NB GC	220-240 V	115 W
911401672007	BY518P LED110/NW PSU WB GM	220-240 V	77 W
911401672107	BY518P LED110/CW PSU WB GM	220-240 V	77 W
911401672207	BY518P LED160/NW PSU WB GM	220-240 V	115 W
911401672307	BY518P LED160/CW PSU WB GM	220-240 V	115 W
911401672507	BY518P LED110/CW PSU NB GM	220-240 V	77 W
911401672707	BY518P LED160/CW PSU NB GM	220-240 V	115 W
911401674407	BY518P G2 LED110/CW PSU 220-240 WB LA	220-240 V	77 W
911401674607	BY518P G2 LED160/CW PSU 220-240 WB LA	220-240 V	115 W
911401646607	BY518P LED260/NW PSU WB GC	220-240 V	187 W
911401646707	BY518P LED260/CW PSU WB GC	220-240 V	187 W
911401647207	BY518P LED260/NW PSU NB GC	220-240 V	187 W
911401647807	BY518P LED260/NW PSU WB GM	220-240 V	187 W
911401647907	BY518P LED260/CW PSU WB GM	220-240 V	187 W
911401650607	BY518P G2 LED260/CW PSU 220-240 WB LA	220-240 V	187 W
911401650707	BY518P G2 LED260/CW PSU 220-240 NB LA	220-240 V	187 W
911401645108	BY518P LED210/NW PSU WB CAU CL	220-240 V	154 W

Mechanical and Housing

Order Code	Full Product Name	Housing Color
911401588745	BY518P SE LED50/NW PSU WB	Grey

Order Code	Full Product Name	Housing Color
911401588845	BY518P SE LED50/CW PSU WB	Grey
911401588945	BY518P SE LED70/NW PSU WB	Grey
911401589045	BY518P SE LED70/CW PSU WB	Grey
911401646407	BY518P LED210/NW PSU WB GC	Gray
911401646507	BY518P LED210/CW PSU WB GC	Gray
911401647007	BY518P LED210/NW PSU NB GC	Gray
911401647107	BY518P LED210/CW PSU NB GC	Gray
911401647607	BY518P LED210/NW PSU WB GM	Gray
911401647707	BY518P LED210/CW PSU WB GM	Gray
911401648307	BY518P LED210/CW PSU NB GM	Gray
911401650407	BY518P G2 LED210/CW PSU 220-240 WB LA	Gray
911401650507	BY518P G2 LED210/CW PSU 220-240 NB LA	Gray
911401645208	BY518P LED260/NW PSU WB CAU CL	Gray
911401676808	BY518P SE LED105/NW PSU WB GC	Grey
911401676908	BY518P SE LED105/CW PSU WB GC	Grey
911401677008	BY518P SE LED140/NW PSU WB GC	Grey
911401677108	BY518P SE LED140/CW PSU WB GC	Grey
911401677208	BY518P SE LED200/NW PSU WB GC	Grey
911401677308	BY518P SE LED200/CW PSU WB GC	Grey
911401677408	BY518P SE LED245/NW PSU WB GC	Grey
911401677508	BY518P SE LED245/CW PSU WB GC	Grey
911401677608	BY518P SE LED290/NW PSU WB GC	Grey
911401677708	BY518P SE LED290/CW PSU WB GC	Grey
911401677808	BY518P SE LED105/NW PSU WB GM	Grey
911401677908	BY518P SE LED105/CW PSU WB GM	Grey
911401678008	BY518P SE LED140/NW PSU WB GM	Grey
911401678108	BY518P SE LED140/CW PSU WB GM	Grey
911401678208	BY518P SE LED200/NW PSU WB GM	Grey
911401678308	BY518P SE LED200/CW PSU WB GM	Grey
911401678408	BY518P SE LED245/NW PSU WB GM	Grey
911401678508	BY518P SE LED245/CW PSU WB GM	Grey
911401678608	BY518P SE LED290/NW PSU WB GM	Grey
911401678708	BY518P SE LED290/CW PSU WB GM	Grey
911401647507	BY518P LED300/CW PSU NB GC	Gray
911401648107	BY518P LED300/CW PSU WB GM	Gray
911401648707	BY518P LED300/CW PSU NB GM	Gray
911401650807	BY518P G2 LED300/CW PSU 220-240 WB LA	Gray
911401650907	BY518P G2 LED300/CW PSU 220-240 NB LA	Gray
911401645308	BY518P LED300/NW PSU WB CAU CL	Gray
911401671207	BY518P LED110/NW PSU WB GC	Gray
911401671307	BY518P LED110/CW PSU WB GC	Gray
911401671407	BY518P LED160/NW PSU WB GC	Gray

Order Code	Full Product Name	Housing Color
911401671507	BY518P LED160/CW PSU WB GC	Gray
911401671607	BY518P LED110/NW PSU NB GC	Gray
911401671707	BY518P LED110/CW PSU NB GC	Gray
911401671807	BY518P LED160/NW PSU NB GC	Gray
911401672007	BY518P LED110/NW PSU WB GM	Gray
911401672107	BY518P LED110/CW PSU WB GM	Gray
911401672207	BY518P LED160/NW PSU WB GM	Gray
911401672307	BY518P LED160/CW PSU WB GM	Gray
911401672507	BY518P LED110/CW PSU NB GM	Gray
911401672707	BY518P LED160/CW PSU NB GM	Gray
911401674407	BY518P G2 LED110/CW PSU 220-240 WB LA	Gray
911401674607	BY518P G2 LED160/CW PSU 220-240 WB LA	Gray
911401646607	BY518P LED260/NW PSU WB GC	Gray
911401646707	BY518P LED260/CW PSU WB GC	Gray
911401647207	BY518P LED260/NW PSU NB GC	Gray
911401647807	BY518P LED260/NW PSU WB GM	Gray
911401647907	BY518P LED260/CW PSU WB GM	Gray
911401650607	BY518P G2 LED260/CW PSU 220-240 WB LA	Gray
911401650707	BY518P G2 LED260/CW PSU 220-240 NB LA	Gray
911401645108	BY518P LED210/NW PSU WB CAU CL	Gray

Approval and Application

Order Code	Full Product Name	CE mark	Ambient temperature range
911401588745	BY518P SE LED50/NW PSU WB	Yes	-30 to +45 °C
911401588845	BY518P SE LED50/CW PSU WB	Yes	-30 to +45 °C
911401588945	BY518P SE LED70/NW PSU WB	Yes	-30 to +45 °C
911401589045	BY518P SE LED70/CW PSU WB	Yes	-30 to +45 °C
911401646407	BY518P LED210/NW PSU WB GC	Yes	-20 to +45 °C
911401646507	BY518P LED210/CW PSU WB GC	Yes	-20 to +45 °C
911401647007	BY518P LED210/NW PSU NB GC	Yes	-20 to +45 °C
911401647107	BY518P LED210/CW PSU NB GC	Yes	-20 to +45 °C
911401647607	BY518P LED210/NW PSU WB GM	Yes	-20 to +45 °C
911401647707	BY518P LED210/CW PSU WB GM	Yes	-20 to +45 °C
911401648307	BY518P LED210/CW PSU NB GM	Yes	-20 to +45 °C
911401650407	BY518P G2 LED210/CW PSU 220-240 WB LA	Yes	-20 to +45 °C
911401650507	BY518P G2 LED210/CW PSU 220-240 NB LA	Yes	-20 to +45 °C
911401645208	BY518P LED260/NW PSU WB CAU CL	No	-20 to +45 °C
911401676808	BY518P SE LED105/NW PSU WB GC	Yes	-30 to +45 °C
911401676908	BY518P SE LED105/CW PSU WB GC	Yes	-30 to +45 °C
911401677008	BY518P SE LED140/NW PSU WB GC	Yes	-30 to +45 °C
911401677108	BY518P SE LED140/CW PSU WB GC	Yes	-30 to +45 °C
911401677208	BY518P SE LED200/NW PSU WB GC	Yes	-30 to +45 °C

Order Code	Full Product Name	CE mark	Ambient temperature range
911401677308	BY518P SE LED200/CW PSU WB GC	Yes	-30 to +45 °C
911401677408	BY518P SE LED245/NW PSU WB GC	Yes	-30 to +45 °C
911401677508	BY518P SE LED245/CW PSU WB GC	Yes	-30 to +45 °C
911401677608	BY518P SE LED290/NW PSU WB GC	Yes	-30 to +45 °C
911401677708	BY518P SE LED290/CW PSU WB GC	Yes	-30 to +45 °C
911401677808	BY518P SE LED105/NW PSU WB GM	Yes	-30 to +45 °C
911401677908	BY518P SE LED105/CW PSU WB GM	Yes	-30 to +45 °C
911401678008	BY518P SE LED140/NW PSU WB GM	Yes	-30 to +45 °C
911401678108	BY518P SE LED140/CW PSU WB GM	Yes	-30 to +45 °C
911401678208	BY518P SE LED200/NW PSU WB GM	Yes	-30 to +45 °C
911401678308	BY518P SE LED200/CW PSU WB GM	Yes	-30 to +45 °C
911401678408	BY518P SE LED245/NW PSU WB GM	Yes	-30 to +45 °C
911401678508	BY518P SE LED245/CW PSU WB GM	Yes	-30 to +45 °C
911401678608	BY518P SE LED290/NW PSU WB GM	Yes	-30 to +45 °C
911401678708	BY518P SE LED290/CW PSU WB GM	Yes	-30 to +45 °C
911401647507	BY518P LED300/CW PSU NB GC	Yes	-20 to +45 °C
911401648107	BY518P LED300/CW PSU WB GM	Yes	-20 to +45 °C
911401648707	BY518P LED300/CW PSU NB GM	Yes	-20 to +45 °C
911401650807	BY518P G2 LED300/CW PSU 220-240 WB LA	Yes	-20 to +45 °C
911401650907	BY518P G2 LED300/CW PSU 220-240 NB LA	Yes	-20 to +45 °C
911401645308	BY518P LED300/NW PSU WB CAU CL	No	-20 to +45 °C
911401671207	BY518P LED110/NW PSU WB GC	Yes	-20 to +45 °C
911401671307	BY518P LED110/CW PSU WB GC	Yes	-20 to +45 °C
911401671407	BY518P LED160/NW PSU WB GC	Yes	-20 to +45 °C
911401671507	BY518P LED160/CW PSU WB GC	Yes	-20 to +45 °C
911401671607	BY518P LED110/NW PSU NB GC	Yes	-20 to +45 °C
911401671707	BY518P LED110/CW PSU NB GC	Yes	-20 to +45 °C
911401671807	BY518P LED160/NW PSU NB GC	Yes	-20 to +45 °C
911401672007	BY518P LED110/NW PSU WB GM	Yes	-20 to +45 °C
911401672107	BY518P LED110/CW PSU WB GM	Yes	-20 to +45 °C
911401672207	BY518P LED160/NW PSU WB GM	Yes	-20 to +45 °C
911401672307	BY518P LED160/CW PSU WB GM	Yes	-20 to +45 °C
911401672507	BY518P LED110/CW PSU NB GM	Yes	-20 to +45 °C
911401672707	BY518P LED160/CW PSU NB GM	Yes	-20 to +45 °C
911401674407	BY518P G2 LED110/CW PSU 220-240 WB LA	Yes	-20 to +45 °C
911401674607	BY518P G2 LED160/CW PSU 220-240 WB LA	Yes	-20 to +45 °C
911401646607	BY518P LED260/NW PSU WB GC	Yes	-20 to +45 °C
911401646707	BY518P LED260/CW PSU WB GC	Yes	-20 to +45 °C
911401647207	BY518P LED260/NW PSU NB GC	Yes	-20 to +45 °C
911401647807	BY518P LED260/NW PSU WB GM	Yes	-20 to +45 °C
911401647907	BY518P LED260/CW PSU WB GM	Yes	-20 to +45 °C
911401650607	BY518P G2 LED260/CW PSU 220-240 WB LA	Yes	-20 to +45 °C
911401650707	BY518P G2 LED260/CW PSU 220-240 NB LA	Yes	-20 to +45 °C
911401645108	BY518P LED210/NW PSU WB CAU CL	No	-20 to +45 °C

Initial Performance (IEC Compliant)

Order Code	Full Product Name	Initial chromaticity
911401588745	BY518P SE LED50/NW PSU WB	(0.38, 0.375) SDCM<5
911401588845	BY518P SE LED50/CW PSU WB	(0.313, 0.329) SDCM<5
911401588945	BY518P SE LED70/NW PSU WB	(0.38, 0.375) SDCM<5
911401589045	BY518P SE LED70/CW PSU WB	(0.313, 0.329) SDCM<5
911401646407	BY518P LED210/NW PSU WB GC	(0.385, 0.380) SDCM<5
911401646507	BY518P LED210/CW PSU WB GC	(0.316, 0.332) SDCM<5
911401647007	BY518P LED210/NW PSU NB GC	(0.385, 0.380) SDCM<5
911401647107	BY518P LED210/CW PSU NB GC	(0.316, 0.332) SDCM<5
911401647607	BY518P LED210/NW PSU WB GM	(0.385, 0.380) SDCM<5
911401647707	BY518P LED210/CW PSU WB GM	(0.316, 0.332) SDCM<5
911401648307	BY518P LED210/CW PSU NB GM	(0.316, 0.332) SDCM<5
911401650407	BY518P G2 LED210/CW PSU 220-240 WB LA	(0.316, 0.332) SDCM<5
911401650507	BY518P G2 LED210/CW PSU 220-240 NB LA	(0.316, 0.332) SDCM<5
911401645208	BY518P LED260/NW PSU WB CAU CL	SDCM<5
911401676808	BY518P SE LED105/NW PSU WB GC	(0.38, 0.375) SDCM<5
911401676908	BY518P SE LED105/CW PSU WB GC	(0.313, 0.329) SDCM<5
911401677008	BY518P SE LED140/NW PSU WB GC	(0.38, 0.375) SDCM<5
911401677108	BY518P SE LED140/CW PSU WB GC	(0.313, 0.329) SDCM<5
911401677208	BY518P SE LED200/NW PSU WB GC	(0.38, 0.375) SDCM<5
911401677308	BY518P SE LED200/CW PSU WB GC	(0.313, 0.329) SDCM<5
911401677408	BY518P SE LED245/NW PSU WB GC	(0.38, 0.375) SDCM<5
911401677508	BY518P SE LED245/CW PSU WB GC	(0.313, 0.329) SDCM<5
911401677608	BY518P SE LED290/NW PSU WB GC	(0.38, 0.375) SDCM<5
911401677708	BY518P SE LED290/CW PSU WB GC	(0.313, 0.329) SDCM<5
911401677808	BY518P SE LED105/NW PSU WB GM	(0.38, 0.375) SDCM<5
911401677908	BY518P SE LED105/CW PSU WB GM	(0.313, 0.329) SDCM<5
911401678008	BY518P SE LED140/NW PSU WB GM	(0.38, 0.375) SDCM<5
911401678108	BY518P SE LED140/CW PSU WB GM	(0.313, 0.329) SDCM<5
911401678208	BY518P SE LED200/NW PSU WB GM	(0.38, 0.375) SDCM<5
911401678308	BY518P SE LED200/CW PSU WB GM	(0.313, 0.329) SDCM<5
911401678408	BY518P SE LED245/NW PSU WB GM	(0.38, 0.375) SDCM<5
911401678508	BY518P SE LED245/CW PSU WB GM	(0.313, 0.329) SDCM<5
911401678608	BY518P SE LED290/NW PSU WB GM	(0.38, 0.375) SDCM<5
911401678708	BY518P SE LED290/CW PSU WB GM	(0.313, 0.329) SDCM<5
911401647507	BY518P LED300/CW PSU NB GC	(0.316, 0.332) SDCM<5
911401648107	BY518P LED300/CW PSU WB GM	(0.316, 0.332) SDCM<5
911401648707	BY518P LED300/CW PSU NB GM	(0.316, 0.332) SDCM<5
911401650807	BY518P G2 LED300/CW PSU 220-240 WB LA	(0.316, 0.332) SDCM<5
911401650907	BY518P G2 LED300/CW PSU 220-240 NB LA	(0.316, 0.332) SDCM<5
911401645308	BY518P LED300/NW PSU WB CAU CL	SDCM<5
911401671207	BY518P LED110/NW PSU WB GC	(0.385, 0.380) SDCM<5

Order Code	Full Product Name	Initial chromaticity
911401671307	BY518P LED110/CW PSU WB GC	(0.316, 0.332) SDCM<5
911401671407	BY518P LED160/NW PSU WB GC	(0.385, 0.380) SDCM<5
911401671507	BY518P LED160/CW PSU WB GC	(0.316, 0.332) SDCM<5
911401671607	BY518P LED110/NW PSU NB GC	(0.385, 0.380) SDCM<5
911401671707	BY518P LED110/CW PSU NB GC	(0.316, 0.332) SDCM<5
911401671807	BY518P LED160/NW PSU NB GC	(0.385, 0.380) SDCM<5
911401672007	BY518P LED110/NW PSU WB GM	(0.385, 0.380) SDCM<5
911401672107	BY518P LED110/CW PSU WB GM	(0.316, 0.332) SDCM<5
911401672207	BY518P LED160/NW PSU WB GM	(0.385, 0.380) SDCM<5
911401672307	BY518P LED160/CW PSU WB GM	(0.316, 0.332) SDCM<5
911401672507	BY518P LED110/CW PSU NB GM	(0.316, 0.332) SDCM<5
911401672707	BY518P LED160/CW PSU NB GM	(0.316, 0.332) SDCM<5
911401674407	BY518P G2 LED110/CW PSU 220-240 WB LA	(0.316, 0.332) SDCM<5
911401674607	BY518P G2 LED160/CW PSU 220-240 WB LA	(0.316, 0.332) SDCM<5
911401646607	BY518P LED260/NW PSU WB GC	(0.385, 0.380) SDCM<5
911401646707	BY518P LED260/CW PSU WB GC	(0.316, 0.332) SDCM<5
911401647207	BY518P LED260/NW PSU NB GC	(0.385, 0.380) SDCM<5
911401647807	BY518P LED260/NW PSU WB GM	(0.385, 0.380) SDCM<5
911401647907	BY518P LED260/CW PSU WB GM	(0.316, 0.332) SDCM<5
911401650607	BY518P G2 LED260/CW PSU 220-240 WB LA	(0.316, 0.332) SDCM<5
911401650707	BY518P G2 LED260/CW PSU 220-240 NB LA	(0.316, 0.332) SDCM<5
911401645108	BY518P LED210/NW PSU WB CAU CL	SDCM<5

© 2026 Signify Holding. All rights reserved. The information provided herein is subject to change, without notice. Signify does not give any representation or warranty as to the accuracy or completeness of the information included herein and shall not be liable for any action in reliance thereon. The information presented in this document is not intended as any commercial offer and does not form part of any quotation or contract, unless otherwise agreed by Signify. Philips and the Philips Shield Emblem are registered trademarks of Koninklijke Philips N.V.