PHILIPS

## GreenPerform EliteX

11171924



# Efficiency at its Finest, Maximize Savings

In today's world, lighting a bright path forward means considering the environment too. Reducing a company's carbon footprint isn't just a feel-good initiative, it's a smart business move. Sustainable lighting solutions not only conserve energy and lower operating costs, but also showcase your commitment to a greener future. Let's illuminate how our innovative high-bay luminaires can help you achieve both brilliance and environmental responsibility. The GreenPerform EliteX is the Best-in-Class Highbay solution designed to deliver the excellent energy efficiency and superior optics suited to provide an unmatched highbay solution for a wide range of applications like warehousing, manufacturing, other industrial applications, atriums, airport concourse, sports halls, etc . Offering excellent beam and Glare control , this highbay offers an unmatched lighting experience. Driven by performance delivered through Superior Optics , higher Efficiency and long useful life optimizing overall cost of the project .

## Benefits

- Best in class efficacy of 180 lum/w and Quality lighting leads to lowering total cost of opportunity.
- High quality material and design leads to longer life class for luminaire
- Suitable for use in harsh Industrial environment
- Option of multiple optics and lumen packages providing application flexibility.

## Applications

- Manufacturing
- Warehouses
- Airports
- Small manufacturing facilities

## Features

- Ingress Protection -IP65
- Impact Resistance IK08
- Inbuilt encapsulated Potted Driver
- Designed for operations under diverse environment from -10˚C to 45˚C
- Life class is 100,000 hours (L70B50 @ Ta45˚C)
- Unique round shape design for excellent thermal stability
- Pressure die-cast housing offers excellent corrosion-resistance and robustness.
- System efficiency 180 lm/W
- Three Beam Angles Extra Narrow beam (ENB30$^0$) Narrow beam (NB60$^0$), and Wide Beam (WB90$^0$)
- Internal Surge Protection 6KV
- Current Ripple <10%
- THD<10%

## Versions



BY713



BY710



BY711



BY712

## Dimensional drawing

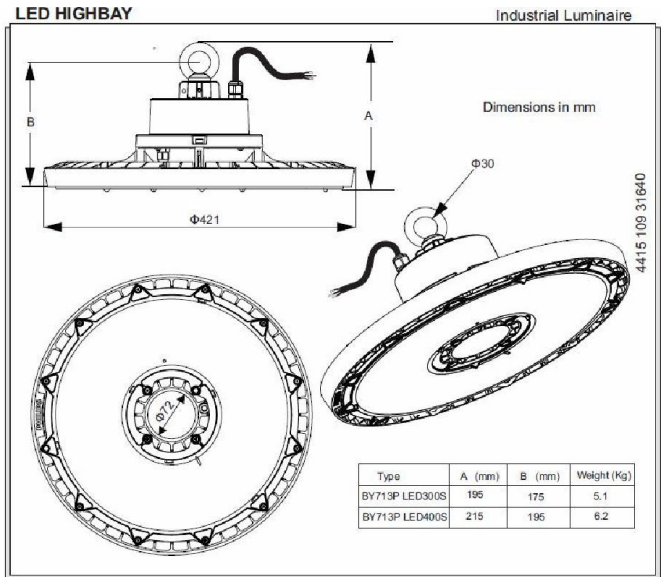


BY713P LED300S 5700 ENB H PSU

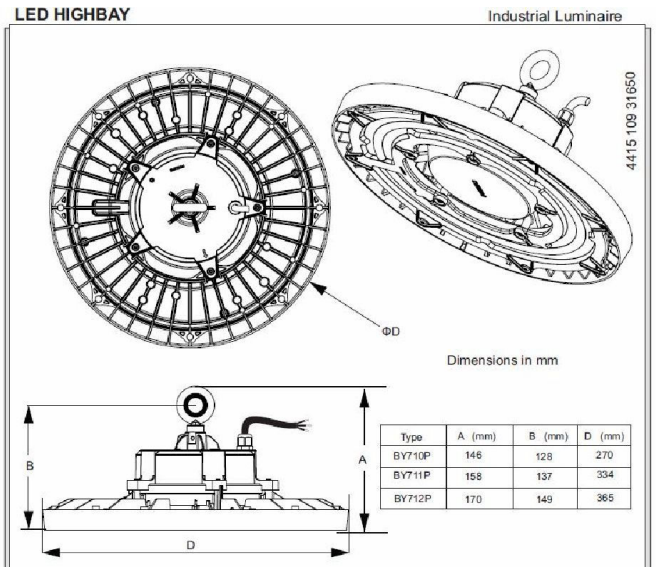


BY712P LED200S 5700 NB H PSU

### General Information

| | |
|---|---|
| Driver included | Yes |

### Light Technical

| | |
|---|---|
| Correlated Color Temperature (Nom) | 5700 K |
| Luminous Efficacy (rated) (Nom) | 180 lm/W |
| Color rendering index (CRI) | ≥70 |
| Optic type | - |

### Operating and Electrical

| | |
|---|---|
| Input Voltage | 140-270 V |
| Protection class IEC | Safety class I |

### Mechanical and Housing

| | |
|---|---|
| Housing Color | Aluminum and gray |
| Ingress protection code | IP65 [Dust penetration-protected, jet-proof] |
| Mech. impact protection code | IK08 [5 J vandal-protected] |
| Optical cover type | Micro-lens optic in polycarbonate cover |

### Approval and Application

| | |
|---|---|
| Flammability mark | For mounting on normally flammable surfaces |
| Ambient temperature range | 0 to +45 °C |

## Light Technical

| Order Code | Full Product Name | Luminous Flux | Beam angle of light source |
|---|---|---|---|
| 919515816953 | BY713P LED300S 5700 ENB H PSU | 30,000 lm | 30 degree(s) |
| 919515816954 | BY713P LED400S 5700 ENB H PSU | 30,000 lm | 30 degree(s) |
| 919515815630 | BY710P LED100S 5700 WB H PSU | 10,000 lm | 90 degree(s) |
| 919515816960 | BY710P LED100S 5700 NB H PSU | 10,000 lm | 60 degree(s) |
| 919515815633 | BY711P LED150S 5700 WB H PSU | 15,000 lm | 90 degree(s) |
| 919515816966 | BY711P LED150S 5700 NB H PSU | 15,000 lm | 60 degree(s) |
| 919515816444 | BY712P LED200S 5700 WB H PSU | 20,000 lm | 90 degree(s) |
| 919515816955 | BY712P LED250S 5700 WB H PSU | 25,000 lm | 90 degree(s) |
| 919515816962 | BY712P LED200S 5700 NB H PSU | 20,000 lm | 60 degree(s) |
| 919515816965 | BY712P LED250S 5700 NB H PSU | 25,000 lm | 60 degree(s) |

## Operating and Electrical

| Order Code | Full Product Name | Power Consumption |
|---|---|---|
| 919515816953 | BY713P LED300S 5700 ENB H PSU | 175 W |
| 919515816954 | BY713P LED400S 5700 ENB H PSU | 230 W |
| 919515815630 | BY710P LED100S 5700 WB H PSU | 60 W |
| 919515816960 | BY710P LED100S 5700 NB H PSU | 60 W |
| 919515815633 | BY711P LED150S 5700 WB H PSU | 85 W |
| 919515816966 | BY711P LED150S 5700 NB H PSU | 85 W |
| 919515816444 | BY712P LED200S 5700 WB H PSU | 115 W |
| 919515816955 | BY712P LED250S 5700 WB H PSU | 140 W |
| 919515816962 | BY712P LED200S 5700 NB H PSU | 115 W |
| 919515816965 | BY712P LED250S 5700 NB H PSU | 140 W |

© 2026 Signify Holding. All rights reserved. The information provided herein is subject to change, without notice. Signify does not give any representation or warranty as to the accuracy or completeness of the information included herein and shall not be liable for any action in reliance thereon. The information presented in this document is not intended as any commercial offer and does not form part of any quotation or contract, unless otherwise agreed by Signify. Philips and the Philips Shield Emblem are registered trademarks of Koninklijke Philips N.V.