PHILIPS

Electronic series ignitor for HID lamp circuits

IGNSU



Digital ignitors for maximum reliability

HID ignitors for series systems

Benefits

- Easy installation and wiring
- Can operate with both semi-parallel and series ballasts
- Digital ignitors ensure maximum reliability

Applications

- Outdoor lighting (most popular application: roads and tunnels)

Features

- Ignitors equipped with screw terminal blocks as standard
- Series ignitor will only work in series circuits

Versions



GPPR_IGCDM-Product photo

Dimensional drawing

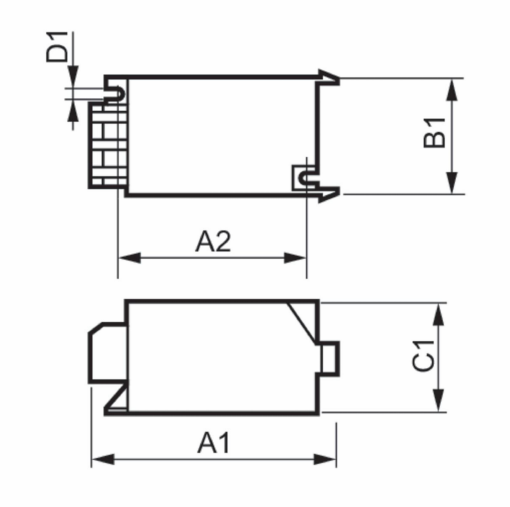

Product	C1	A1	A2	B1	D1
SU 52	50 mm	90 mm	69 mm	55 mm	4.3 mm

Operating and Electrical

Input Voltage	380-420 V
Input Frequency	50 to 60 Hz

Mechanical and Housing

Housing	PC UL94V-2

© 2026 Signify Holding. All rights reserved. The information provided herein is subject to change, without notice. Signify does not give any representation or warranty as to the accuracy or completeness of the information included herein and shall not be liable for any action in reliance thereon. The information presented in this document is not intended as any commercial offer and does not form part of any quotation or contract, unless otherwise agreed by Signify. Philips and the Philips Shield Emblem are registered trademarks of Koninklijke Philips N.V.