PHILIPS

PrimaVision BasePerform

1245929



The ideal alternative to magnetic drivers

Highly reliable electronic drivers for SON and CDO lamps designed to save energy thanks to better light efficiency compared to magnetic drivers, and to save on maintenance costs thanks to a lifetime of up to 50,000 hours.

Benefits

- Focused on best operation with SON and CDO lamps - can function for up to 6 years without maintenance cost
- Competitive pricing – similar to magnetic system (ballast + ignitor + capacitor)
- Same number of drivers per MCB as electromagnetic ballasts

Features

- Lifetime of 50,000 hours, 3-year warranty
- Future-proof solution [A2-compliant] designed to compete with electromagnetic systems
- Wide temperature range: -30 to + 55 °C

Applications

- Roads
- Urban streets
- Parks

Versions



Lamp Driver, eHID, HID-PV Base 50 SON C3 220-240V



GPPR IPVCPOXt 0016



GPPR_IPVCPOXt_PHL_0011-Product photo

Dimensional drawing

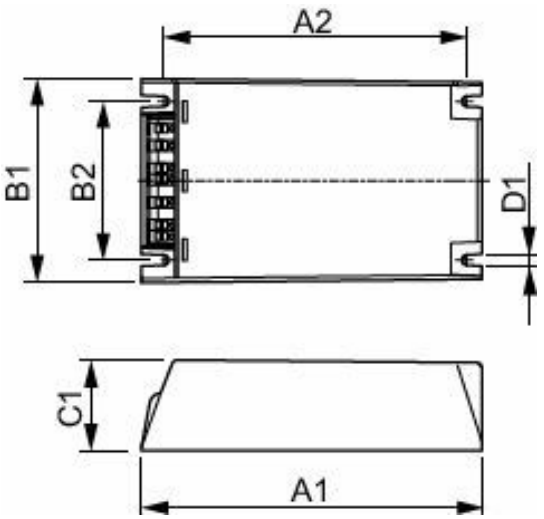

Product	D1	C1	A1	A2	B1	B2
HID-PV Base 100 SON/CDO Q 220-240V	4.5 mm	40.0 mm	150.0 mm	133.6 mm	90.0 mm	70.0 mm
HID-PV Base 150 SON/CDO Q 220-240V	4.5 mm	40.0 mm	150.0 mm	133.6 mm	90.0 mm	70.0 mm

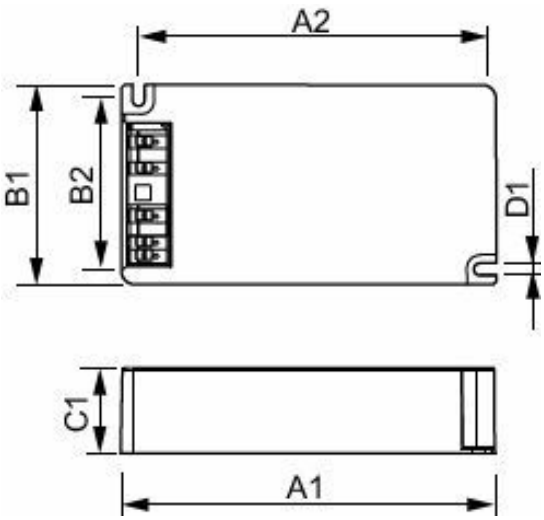

Product	D1	C1	A1	A2	B1	B2
HID-PV Base 70 SON C3 220-240V	4.5 mm	32.0 mm	141.0 mm	128.5 mm	75.0 mm	63.7 mm

Operating and Electrical

Input Voltage	220 to 240 V
Line Frequency	50 to 60 Hz
Input Frequency	50 to 60 Hz

Operating and Electrical

Order Code	Full Product Name	Number of Products on MCB (16A Type B) (Nom)
913712008766	HID-PV Base 70 SON C3 220-240V	13
913712008966	HID-PV Base 150 SON/CDO Q 220-240V	8
913712008866	HID-PV Base 100 SON/CDO Q 220-240V	11

Mechanical and Housing

Order Code	Full Product Name	Housing
913712008766	HID-PV Base 70 SON C3 220-240V	C3
913712008966	HID-PV Base 150 SON/CDO Q 220-240V	Q
913712008866	HID-PV Base 100 SON/CDO Q 220-240V	Q

© 2026 Signify Holding. All rights reserved. The information provided herein is subject to change, without notice. Signify does not give any representation or warranty as to the accuracy or completeness of the information included herein and shall not be liable for any action in reliance thereon. The information presented in this document is not intended as any commercial offer and does not form part of any quotation or contract, unless otherwise agreed by Signify. Philips and the Philips Shield Emblem are registered trademarks of Koninklijke Philips N.V.