PHILIPS

Uni Wall Sconce

10575312



Uni Wall Mount Sconce: Urban up and down lighting Wall Mounts applies on surface, e.g., parking garages, entrances, outdoor terrace and wall in garden.

Public areas all seek for the most reliable and professional lighting solutions, e.g., parking areas, entrances, outdoor terrace, and wall in garden. The Philips Uni Wall Mount Sconce can be installed easily in accordance with per scenario, delivering the optimized lighting to surroundings. The modern sleek design makes the fixture suitable to be installed either in renovation or new installation scenarios. The Philips Uni Wall Mount sconce helps you achieve superb reliability and more. Same as other product range in Philips, the product is designed under a variety of Philips quality standard with a good price/quality ratio. Therefore, Philips Uni Wall Mount Sconce offers another affordable, energy – efficient and stable choice in the existing wall Mounting family.

Benefits

- Modern streamlined design.
- Multiple mounting option.
- Easy directly mounted over a bracket.

Features

- Die – cast aluminum housing and tempered glass diffuser.
- Textured architectural bronze powder coat finish.
- Various color can be customized to meet per customer need.

Applications

- Walkways
- Parks and Plazas
- Outdoor Parking areas

Versions



Uni Wall Sconce



Uni Wall Sconce

Dimensional drawing

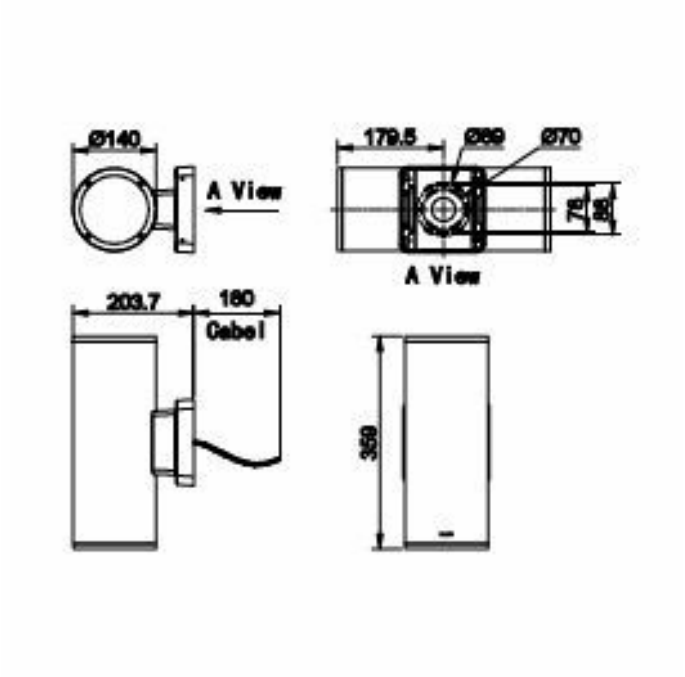

BWP411 LED WW 220V 40W WB PSU 7012

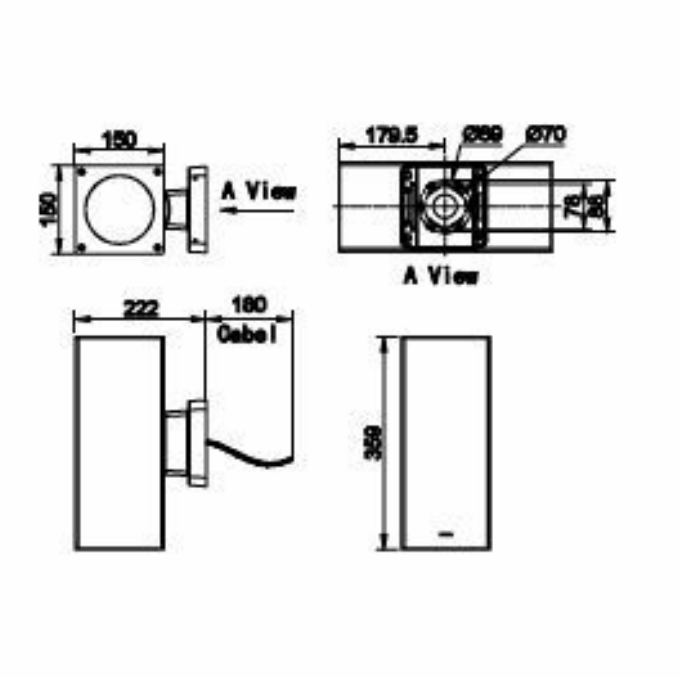

BWP410 LED NW 220V 40W MB PSU 7012

General Information

Driver included	Yes

Light Technical

Color rendering index (CRI)	70

Operating and Electrical

Power Consumption	40 W

Controls and Dimming

Dimmable	No

Mechanical and Housing

Housing Color	Gray
Ingress protection code	IP65 [Dust penetration-protected, jet-proof]
Mech. impact protection code	IK08 [5 J vandal-protected]
Optical cover type	Flat glass

Approval and Application

CE mark	Yes

Light Technical

Order Code	Full Product Name	Luminous Flux	Correlated Color Temperature (Nom)	Light source color
911401697308	BWP411 LED WW 220V 40W NB PSU 7012	5,000 lm	3000 K	730 warm white
911401697408	BWP411 LED WW 220V 40W MB PSU 7012	5,000 lm	3000 K	730 warm white
911401697508	BWP411 LED WW 220V 40W WB PSU 7012	5,000 lm	3000 K	730 warm white
911401697608	BWP411 LED NW 220V 40W NB PSU 7012	5,400 lm	4000 K	740 neutral white
911401697708	BWP411 LED NW 220V 40W MB PSU 7012	5,400 lm	4000 K	740 neutral white
911401697808	BWP411 LED NW 220V 40W WB PSU 7012	5,400 lm	4000 K	740 neutral white
911401696708	BWP410 LED WW 220V 40W NB PSU 7012	5,000 lm	3000 K	730 warm white
911401696808	BWP410 LED WW 220V 40W MB PSU 7012	5,000 lm	3000 K	730 warm white
911401696908	BWP410 LED WW 220V 40W WB PSU 7012	5,000 lm	3000 K	730 warm white
911401697008	BWP410 LED NW 220V 40W NB PSU 7012	5,400 lm	4000 K	740 neutral white
911401697108	BWP410 LED NW 220V 40W MB PSU 7012	5,400 lm	4000 K	740 neutral white
911401697208	BWP410 LED NW 220V 40W WB PSU 7012	5,400 lm	4000 K	740 neutral white

© 2026 Signify Holding. All rights reserved. The information provided herein is subject to change, without notice. Signify does not give any representation or warranty as to the accuracy or completeness of the information included herein and shall not be liable for any action in reliance thereon. The information presented in this document is not intended as any commercial offer and does not form part of any quotation or contract, unless otherwise agreed by Signify. Philips and the Philips Shield Emblem are registered trademarks of Koninklijke Philips N.V.