PHILIPS

Cleanroom CR350B

CR350B



Cleanroom: when light has to be hygienic, excellent quality and high definition

When operating a facility where the highest levels of hygiene are required, the demands placed on light are also very high. It must comply with strict standards; it must be easy to clean, dust-free, sealed and waterproof – all while offering exceptional optical performance. Philips Cleanroom CR350B luminaires are designed specifically for facilities where hygiene is critical, such as hospitals, laboratories, surgical and examination rooms, as well as applications in the pharmaceutical industry. These energy-efficient, durable cleanroom lighting solutions deliver excellent quality of light that complies with the strictest norms, as well as legislation that requires special IP65, easy-to-clean, dust-free luminaires. Thanks to excellent quality of light and color rendering, these Philips cleanroom luminaires also reduce eye strain. This can make all the difference in industries such as cleanroom production, graphics and textile manufacturing where high lumen and low glare light are so important.

Benefits

- Excellent quality of light
- Complies with cleanroom norms and legislation
- High reliability, low maintenance

Applications

- Surgical and examination rooms
- Laboratories and pharmaceutical facilities
- Cleanroom production areas

Features

- Fully IP65 and ENEC compliant
- Excellent color rendering CRI >90
- Lumen output up to 6000 lm
- Low glare UGR <19
- Surface-mounted bracket and safety cable available as an accessory

Versions

Photo



Photo



Dimensional drawing

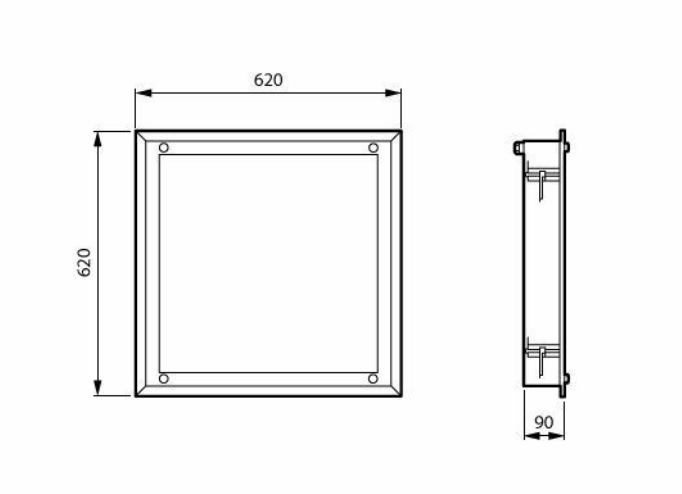

940 neutral white - Power supply unit with DALI interface - Push-in connector 5-pole

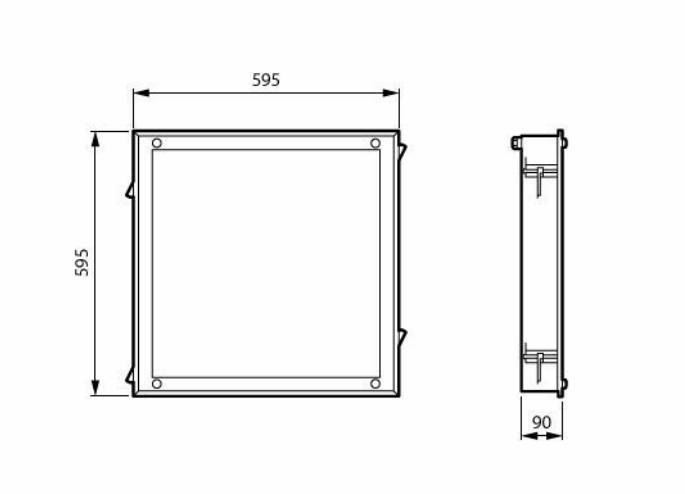

840 neutral white - Power supply unit with DALI interface - Push-in connector 5-pole

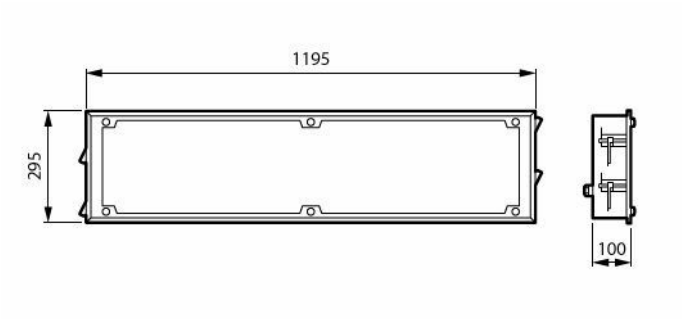

940 neutral white - Power supply unit with DALI interface - Push-in connector 5-pole

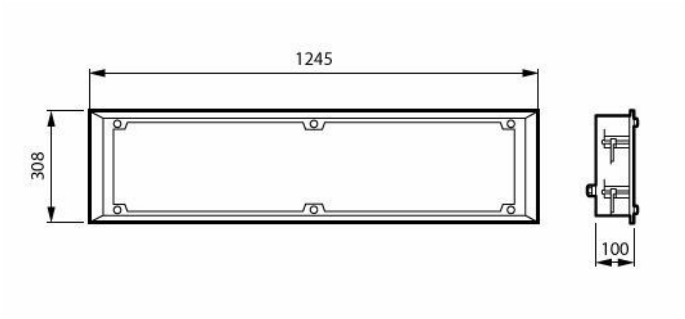

940 neutral white - Power supply unit with DALI interface - Push-in connector 5-pole

Product details



Photo



Photo



Photo



Photo



Photo



Photo

General Information

Light source replaceable	Yes
Number of gear units	1 unit
Driver included	Yes
Service tag	Yes

Light Technical

Correlated Color Temperature (Nom)	4000 K
Beam angle of light source	120 degree(s)
Optic type	Wide beam

Operating and Electrical

Input Voltage	220 to 240 V
Line Frequency	50 to 60 Hz
Suitable for random switching	Yes
Protection class IEC	Safety class I

Mechanical and Housing

Housing Color	White
Ingress protection code	IP65 [Dust penetration-protected, jet-proof]
Mech. impact protection code	IK09 [10 J]

Approval and Application

Glow-wire test	Temperature 650 °C, duration 30 s
Flammability mark	For mounting on normally flammable surfaces
CE mark	Yes
ENEC mark	ENEC mark
Ambient temperature range	-20 to +35 °C

Initial Performance (IEC Compliant)

Luminous flux tolerance	+/-10%

Light Technical

Order Code	Full Product Name	Luminous Flux	Luminous Efficacy (rated) (Nom)	Color rendering index (CRI)
912401483354	CR350B LED40S/940 PSU W60L60	4,000 lm	98 lm/W	>90
912401483355	CR350B LED40S/840 PSD W60L60	4,000 lm	108 lm/W	>80
912401483357	CR350B LED40S/940 PSD W60L60	4,000 lm	98 lm/W	>90
912401483360	CR350B LED60S/940 PSU W60L60	6,000 lm	100 lm/W	>90
912401483361	CR350B LED60S/840 PSD W60L60	6,000 lm	109 lm/W	>80
912401483363	CR350B LED60S/940 PSD W60L60	6,000 lm	100 lm/W	>90
912401483381	CR352B LED40S/940 PSD W62L62	4,000 lm	98 lm/W	>90
912401483387	CR352B LED60S/940 PSD W62L62	6,000 lm	100 lm/W	>90
912401483366	CR350B LED40S/940 PSU W30L120	4,000 lm	98 lm/W	>90
912401483367	CR350B LED40S/840 PSD W30L120	4,000 lm	108 lm/W	>80
912401483369	CR350B LED40S/940 PSD W30L120	4,000 lm	98 lm/W	>90
912401483372	CR350B LED60S/940 PSU W30L120	6,000 lm	100 lm/W	>90
912401483373	CR350B LED60S/840 PSD W30L120	6,000 lm	109 lm/W	>80
912401483375	CR350B LED60S/940 PSD W30L120	6,000 lm	100 lm/W	>90
912401483393	CR352B LED40S/940 PSD W31L125	4,000 lm	98 lm/W	>90
912401483399	CR352B LED60S/940 PSD W31L125	6,000 lm	100 lm/W	>90

Operating and Electrical

Order Code	Full Product Name	Power Consumption
912401483354	CR350B LED40S/940 PSU W60L60	41 W
912401483355	CR350B LED40S/840 PSD W60L60	37 W
912401483357	CR350B LED40S/940 PSD W60L60	41 W
912401483360	CR350B LED60S/940 PSU W60L60	60 W
912401483361	CR350B LED60S/840 PSD W60L60	55 W
912401483363	CR350B LED60S/940 PSD W60L60	60 W
912401483381	CR352B LED40S/940 PSD W62L62	41 W
912401483387	CR352B LED60S/940 PSD W62L62	60 W
912401483366	CR350B LED40S/940 PSU W30L120	41 W
912401483367	CR350B LED40S/840 PSD W30L120	37 W
912401483369	CR350B LED40S/940 PSD W30L120	41 W
912401483372	CR350B LED60S/940 PSU W30L120	60 W
912401483373	CR350B LED60S/840 PSD W30L120	55 W
912401483375	CR350B LED60S/940 PSD W30L120	60 W
912401483393	CR352B LED40S/940 PSD W31L125	41 W
912401483399	CR352B LED60S/940 PSD W31L125	60 W

Controls and Dimming

Order Code	Full Product Name	Dimmable	Maximum dim level
912401483354	CR350B LED40S/940 PSU W60L60	No	Not applicable
912401483355	CR350B LED40S/840 PSD W60L60	Yes	1%
912401483357	CR350B LED40S/940 PSD W60L60	Yes	1%
912401483360	CR350B LED60S/940 PSU W60L60	No	Not applicable
912401483361	CR350B LED60S/840 PSD W60L60	Yes	1%
912401483363	CR350B LED60S/940 PSD W60L60	Yes	1%
912401483381	CR352B LED40S/940 PSD W62L62	Yes	1%
912401483387	CR352B LED60S/940 PSD W62L62	Yes	1%
912401483366	CR350B LED40S/940 PSU W30L120	No	Not applicable
912401483367	CR350B LED40S/840 PSD W30L120	Yes	1%
912401483369	CR350B LED40S/940 PSD W30L120	Yes	1%
912401483372	CR350B LED60S/940 PSU W30L120	No	Not applicable
912401483373	CR350B LED60S/840 PSD W30L120	Yes	1%
912401483375	CR350B LED60S/940 PSD W30L120	Yes	1%
912401483393	CR352B LED40S/940 PSD W31L125	Yes	1%
912401483399	CR352B LED60S/940 PSD W31L125	Yes	1%

Initial Performance (IEC Compliant)

Order Code	Full Product Name	Initial chromaticity
912401483354	CR350B LED40S/940 PSU W60L60	(0.39, 0.38) SDCM <3

Order Code	Full Product Name	Initial chromaticity
912401483355	CR350B LED40S/840 PSD W60L60	(0.38, 0.38) SDCM <3
912401483357	CR350B LED40S/940 PSD W60L60	(0.39, 0.38) SDCM <3
912401483360	CR350B LED60S/940 PSU W60L60	(0.39, 0.38) SDCM <3
912401483361	CR350B LED60S/840 PSD W60L60	(0.38, 0.38) SDCM <3
912401483363	CR350B LED60S/940 PSD W60L60	(0.39, 0.38) SDCM <3
912401483381	CR352B LED40S/940 PSD W62L62	(0.39, 0.38) SDCM <3
912401483387	CR352B LED60S/940 PSD W62L62	(0.39, 0.38) SDCM <3
912401483366	CR350B LED40S/940 PSU W30L120	(0.39, 0.38) SDCM <3
912401483367	CR350B LED40S/840 PSD W30L120	(0.38, 0.38) SDCM <3
912401483369	CR350B LED40S/940 PSD W30L120	(0.39, 0.38) SDCM <3
912401483372	CR350B LED60S/940 PSU W30L120	(0.39, 0.38) SDCM <3
912401483373	CR350B LED60S/840 PSD W30L120	(0.38, 0.38) SDCM <3
912401483375	CR350B LED60S/940 PSD W30L120	(0.39, 0.38) SDCM <3
912401483393	CR352B LED40S/940 PSD W31L125	(0.39, 0.38) SDCM <3
912401483399	CR352B LED60S/940 PSD W31L125	(0.39, 0.38) SDCM <3

Polar normal diagrams

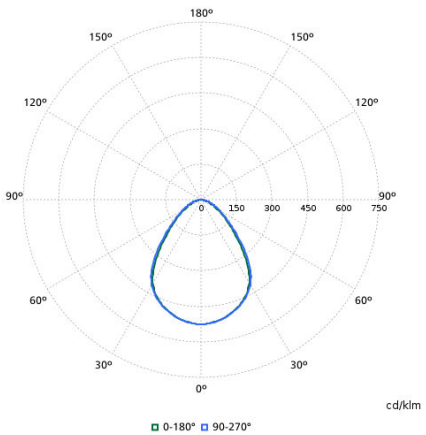

CR350B LED40S/840 PSD W60L60
912401483355

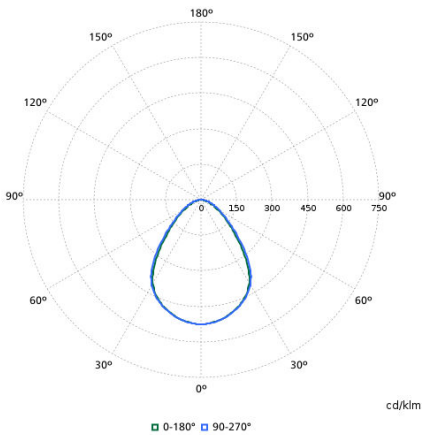

CR350B LED40S/940 PSD W60L60
912401483357

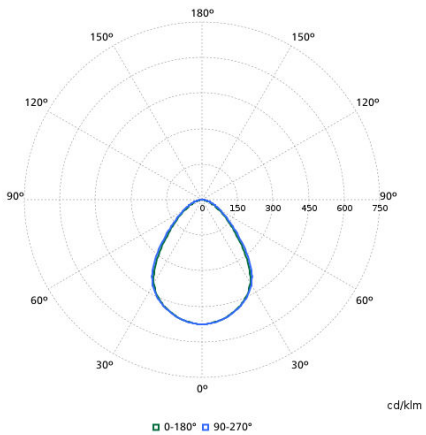

CR350B LED60S/940 PSU W60L60
912401483360

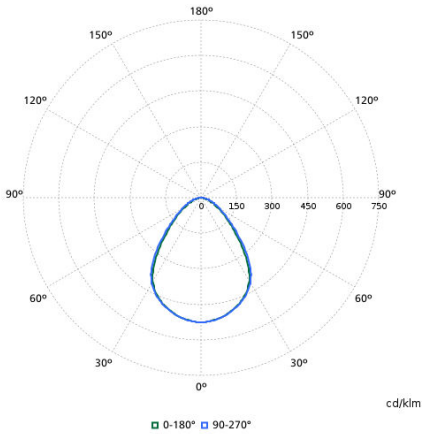

CR350B LED40S/840 PSD W30L120
912401483367

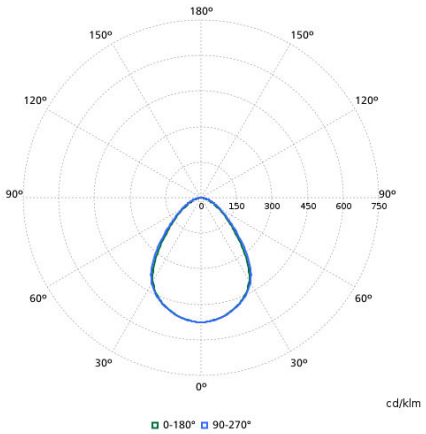

CR350B LED40S/940 PSU W30L120
912401483366

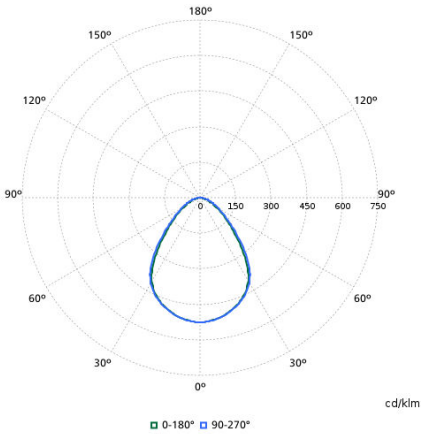

CR350B LED60S/840 PSD W60L60
912401483361

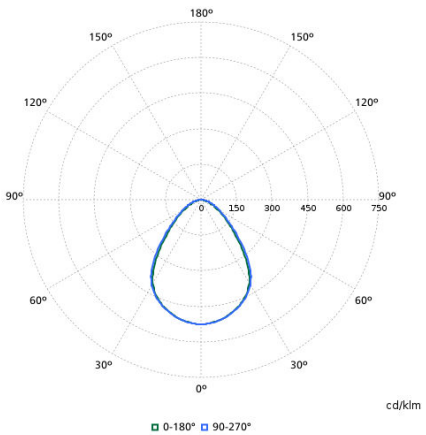

CR350B LED60S/940 PSU W30L120
912401483372

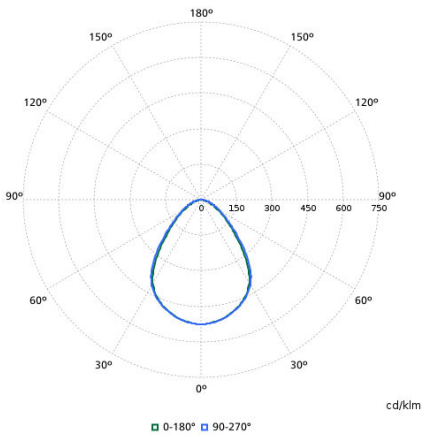

CR350B LED40S/940 PSU W60L60
912401483354

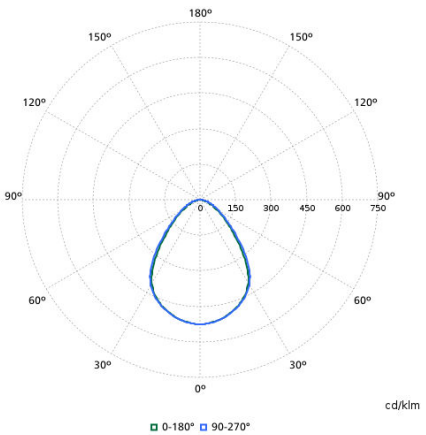

CR350B LED60S/840 PSD W30L120
912401483373

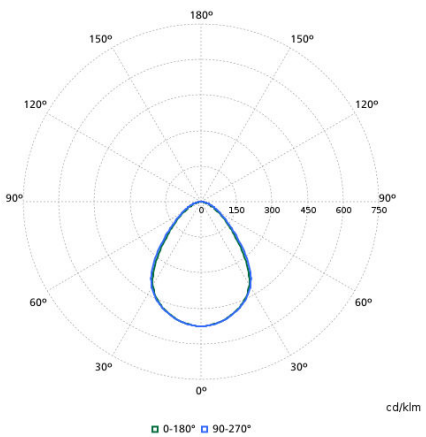

CR350B LED60S/940 PSD W30L120
912401483375

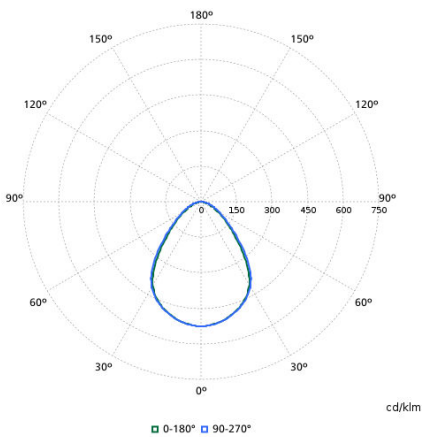

CR350B LED40S/940 PSD W30L120
912401483369

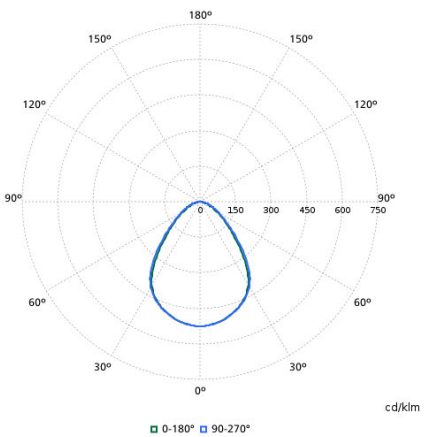

CR352B LED60S/940 PSD W31L125
912401483399

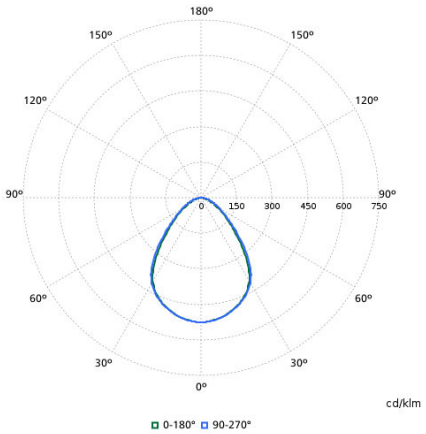

CR352B LED40S/940 PSD W62L62
912401483381

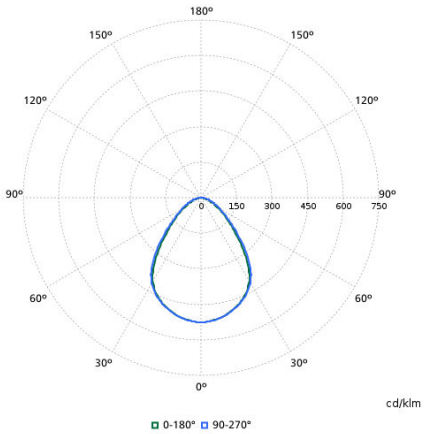

CR352B LED60S/940 PSD W62L62
912401483387

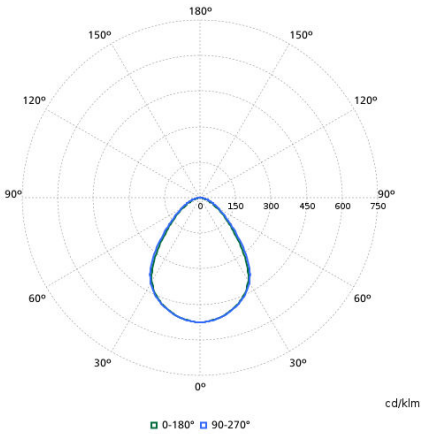

CR350B LED60S/940 PSD W60L60
912401483363

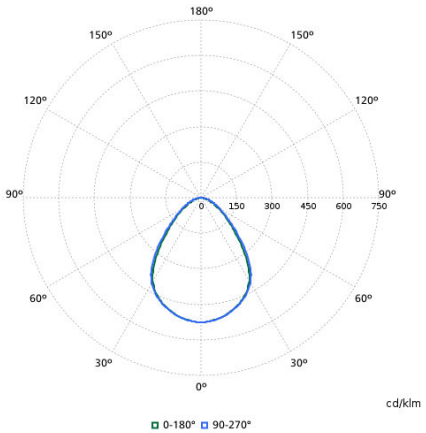

CR352B LED40S/940 PSD W31L125
912401483393

© 2026 Signify Holding. All rights reserved. The information provided herein is subject to change, without notice. Signify does not give any representation or warranty as to the accuracy or completeness of the information included herein and shall not be liable for any action in reliance thereon. The information presented in this document is not intended as any commercial offer and does not form part of any quotation or contract, unless otherwise agreed by Signify. Philips and the Philips Shield Emblem are registered trademarks of Koninklijke Philips N.V.