PHILIPS

MSR Gold™ MiniFastFit (DJ/Club)

XDMSRGM



MSR Gold™ MiniFastFit – lamp replacement in seconds

Thanks to the specially designed lamp base and lamp holder, the MSR Gold™ MiniFastFit takes just seconds to replace, to help ensure non-stop clubbing entertainment. In addition, the innovative gold plated pins ensure excellent current transfer to prolong lamp and lamp holder lifetimes and thereby reduce lamp replacement costs. Easy handling and small compact fixture designs are allowed by the lamps compact size, while the very short arc provides a high perceived brightness and high beam intensity.

Benefits

- Lamp replacement in just seconds
- Easy handling, smaller and lighter fixtures
- Reduces early lamp or lamp holder failures. Excellent current transfer
- High perceived brightness
- High beam intensity

Applications

- Events
- Shows
- DJ/Club

Features

- Philips MiniFastFit
- Compact design

- Innovative gold plated pins
- Color temperature >8000K
- Very short arc
- A lamp breaking is extremely unlikely to have any impact on your health. If a lamp breaks, ventilate the room for 30 minutes and remove the parts, preferably with gloves. Put them in a sealed plastic bag and take it to your local waste facilities for recycling. Do not use a vacuum cleaner.

Versions



XPPR_XDMSR_0008-Product photo

Dimensional drawing

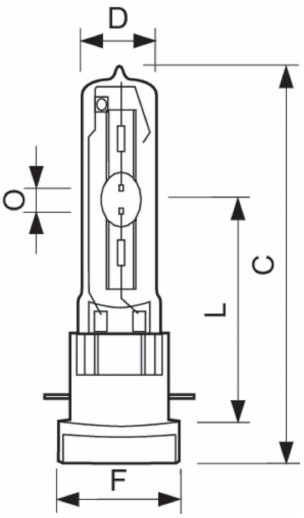

Product	D (max)	O	L (min)	L (max)	L	C (max)
MSR Gold 300/2 MiniFastFit 1CT/4	23 mm	5.0 mm	65.8 mm	67.8 mm	66.8 mm	126 mm

General Information

Cap-Base	PGJX28
Operating Position	UNIVERSAL [Any or Universal (U)]

Light Technical

Color Code	2
Luminous Flux	22,700 lm
Correlated Color Temperature (Nom)	9300 K
Color rendering index (CRI)	78

Operating and Electrical

Power Consumption	300 W
Lamp Current (Nom)	3.75 A

Controls and Dimming

Dimmable	Yes

© 2026 Signify Holding. All rights reserved. The information provided herein is subject to change, without notice. Signify does not give any representation or warranty as to the accuracy or completeness of the information included herein and shall not be liable for any action in reliance thereon. The information presented in this document is not intended as any commercial offer and does not form part of any quotation or contract, unless otherwise agreed by Signify. Philips and the Philips Shield Emblem are registered trademarks of Koninklijke Philips N.V.