PHILIPS

BY202P LED 43S CW PSU PC LILO

919515815369



An Energy efficient Robust Well Glass for Industrial and commercial application

DuraLED Pro well glass is designed to replace traditional Well Glass up to 70W with only 50% of the load for similar illumination. It is a perfect LED solution for outdoor application and industry of harsh condition like power plant, metal, and nonhazardous area in chemical and petrochemical industry. Compared to conventional HID Well Glass, it improves reliability, comfort, while reducing energy and maintenance cost dramatically. DuraLED Pro Well Glass comes with 2 different mounting arrangement options and with 2 color temperature and 2 lumen outputs.

Warnings and Safety

- Meant for Indoor Application Only. Should not be used in outdoor environment.

General Information

Driver included	Yes
Light source engine type	LED
Warranty period	1 years

Light Technical

Luminous Flux	4,300 lm
Correlated Color Temperature (Nom)	6500 K
Luminous Efficacy (rated) (Nom)	120 lm/W
Color rendering index (CRI)	>80

Beam angle of light source	- degree(s)
Light source color	865 cool daylight
Optic type	-
Luminaire light beam spread	-

Operating and Electrical

Input Voltage	220 to 240 V
Line Frequency	50 Hz
Power Consumption	35 W
Power Factor (Fraction)	0.95
Protection class IEC	Safety class I
Surge Protection (Common/ Differential)	4/4 kV kV

Controls and Dimming

Dimmable	No
Control interface	-

Mechanical and Housing

Housing Material	Aluminium pressure die cast
Optic material	Polycarbonate
Optical cover material	Polycarbonate
Housing Color	Aluminum and gray
Mounting device	Eye-Bolt
Optical cover shape	-
Overall height	184 mm
Overall diameter	150 mm

Dimensional drawing

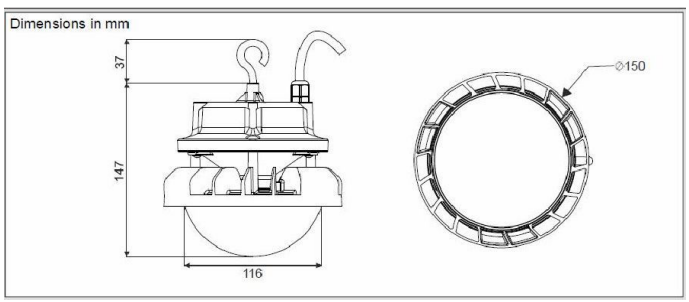

Material	Pressure die cast aluminum
Ingress protection code	IP65 [Dust penetration-protected, jet-proof]
Mech. impact protection code	IK08 [5 J vandal-protected]
Optical cover type	Polycarbonate bowl/cover
Net Weight (Piece)	0.850 kg

Approval and Application

Flammability mark	For mounting on normally flammable surfaces
Ambient temperature range	0 to +45 °C

Initial Performance (IEC Compliant)

Initial chromaticity	<5
Power consumption tolerance	+/-10%

Over Time Performance (IEC Compliant)

Median useful life L70B50	50,000 hour(s)

Product Data

Order product name	BY202P LED 43S CW PSU PC LILO
Full product name	BY202P LED 43S CW PSU PC LILO
Order code	919515815369
Material Nr. (12NC)	919515815369
Numerator - Quantity Per Pack	1
Numerator - Packs per outer box	8

Related Documents

Documents and certificates	Document Name	Download
Installation Instructions	DuraLed Pro_BY202P-INI.pdf	Download

© 2026 Signify Holding. All rights reserved. The information provided herein is subject to change, without notice. Signify does not give any representation or warranty as to the accuracy or completeness of the information included herein and shall not be liable for any action in reliance thereon. The information presented in this document is not intended as any commercial offer and does not form part of any quotation or contract, unless otherwise agreed by Signify. Philips and the Philips Shield Emblem are registered trademarks of Koninklijke Philips N.V.