PHILIPS

MSD Platinum

XDMSDPLA



MSD Platinum – The power to light your creativity

The MSD Platinum lamps open up new levels of creative freedom in entertainment lighting, with powerful, compact and brilliantly intense light. Their compact, lightweight design provides the freedom to create smaller, lighter luminaires – for use at any location on stage. And their short arc, high color temperature and innovative reflector produce a sparkling, high beam intensity for outstanding color reproduction. They also offer long and reliable lifetime, high efficacy and fast replacement times. It all adds up to an intensely exciting creative experience.

Benefits

- High beam intensity
- Freedom to create smaller and lighter fixtures
- High perceived brightness
- A long and reliable performance

Applications

- Events
- Shows/Theater
- Touring/Stage

Features

- Very short arc
- Compact system
- High correlated color temperature
- Philips Platinum technology
- A lamp breaking is extremely unlikely to have any impact on your health. If a lamp breaks, ventilate the room for 30 minutes and remove the parts, preferably with gloves. Put them in a sealed plastic bag and take it to your local waste facilities for recycling. Do not use a vacuum cleaner.

Versions



XPPR XDMSD 0010

Dimensional drawing

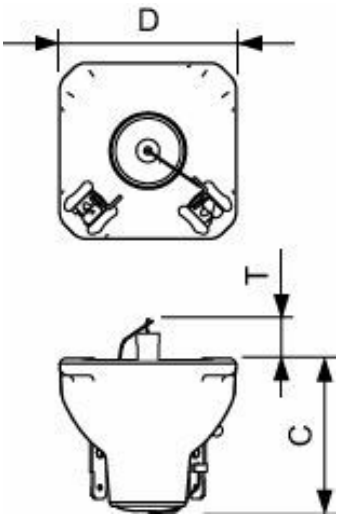

Product	D (max)	T (max)	O	C (max)
MSD Platinum 2 R 1CT/8	46.5 mm	13.5 mm	1.2 mm	57.1 mm
MSD Platinum 2 R UNP/24	46.5 mm	13.5 mm	1.2 mm	57.1 mm

General Information

Cap-Base	-
Operating Position	UNIVERSAL [Any or Universal (U)]

Light Technical

Color Code	2
Luminous Flux	5,150 lm
Correlated Color Temperature (Nom)	8000 K
Color rendering index (CRI)	-

Operating and Electrical

Power Consumption	132 W

Controls and Dimming

Dimmable	Yes

© 2026 Signify Holding. All rights reserved. The information provided herein is subject to change, without notice. Signify does not give any representation or warranty as to the accuracy or completeness of the information included herein and shall not be liable for any action in reliance thereon. The information presented in this document is not intended as any commercial offer and does not form part of any quotation or contract, unless otherwise agreed by Signify. Philips and the Philips Shield Emblem are registered trademarks of Koninklijke Philips N.V.