**JGB795 MBW 750 BK**

912300023373



# JGB795 | CLASSICSTREET BRACKETS POSTTOP, Wall-mounting bracket, 750 mm, Black

Recalling the iconic beauty of 20th-century street lanterns, ClassicStreet combines elegant design with the subtle details of heritage luminaires while meeting today's urban lighting requirements. Though echoing the past, the ClassicStreet luminaire is very much shaped for the future. Its gently curved design, together with dedicated brackets and poles, creates a contemporary look that beautifies our cities and creates distinctive and warm night- and daytime ambiences. Not only in historical and traditional architectural settings, but also in more modern urban environments too. Designed around its LED engine, ClassicStreet delivers outstanding levels of lighting and energy performance.

## Mechanical and Housing

| | |
|---|---|
| Bracket length | 750 mm |
| Bracket color | Black |
| Bracket type | Wall-mounting bracket |
| Net Weight (Piece) | 6.900 kg |

## Approval and Application

| | |
|---|---|
| CE mark | Yes |
| EU RoHS compliant | Yes |

## Sustainability Data

| | |
|---|---|
| Non-virgin material ratio of the packaging | Cardboard > 80% recycled |
| Packaging Recyclable content ratio | Cardboard recycling rate > 80% |
| Packaging Material | Cardboard |

## Dimensional drawing

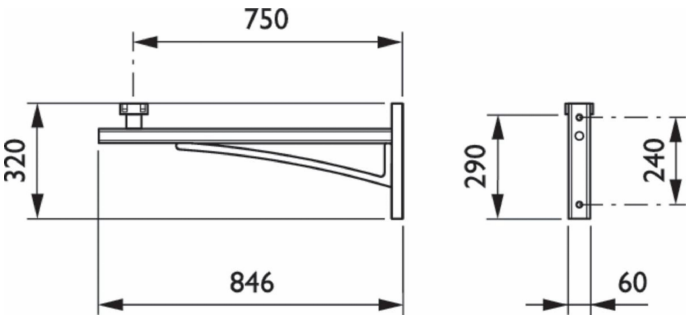


## Product Data

| | |
|---|---|
| Order product name | JGB795 MBW 750 BK |
| Full product name | JGB795 MBW 750 BK |
| Full product code | 871794321650500 |
| Order code | 912300023373 |
| Material Nr. (12NC) | 912300023373 |
| Numerator - Quantity Per Pack | 1 |
| EAN/UPC - Product/Case | 8717943216505 |
| Numerator - Packs per outer box | 1 |
| EAN/UPC - Case | 8717943216505 |
| Product family code | JGB795 [CLASSICSTREET BRACKETS POSTTOP] |

## Related Documents

| Documents and certificates | Document Name | Download |
|---|---|---|
| Installation Instructions | ClassicStreet-BDP794_ BPP794_BSP794_BVP794-II.pdf | Download |

© 2026 Signify Holding. All rights reserved. The information provided herein is subject to change, without notice. Signify does not give any representation or warranty as to the accuracy or completeness of the information included herein and shall not be liable for any action in reliance thereon. The information presented in this document is not intended as any commercial offer and does not form part of any quotation or contract, unless otherwise agreed by Signify. All trademarks are owned by Signify Holding or their respective owners.