

GreenUp deep recessed downlight G2: The most affordable deep recessed downlight

GreenUp deep recessed downlight G2

The GreenUp deep recessed downlight G2 line offers a selection of popular LED luminaires that not only capture the trend of deep recessed but also come with high levels of Philips quality at a competitive price. Reliable, energy-efficient and affordable—just what you need.

Benefits

- Philips quality and reliability
- Energy-efficient
- Comfortable, diffused light

Features

- 100–110 lm/W
- Deep recessed design
- Multiple sizes and light levels available
- Multiple color temperatures available

Application

- Offices
- Corridors
- Rest rooms

GreenUp deep recessed downlight G2

Versions



GreenUp deep recessed downlight G2



GreenUp deep recessed downlight G2

Dimensional drawing

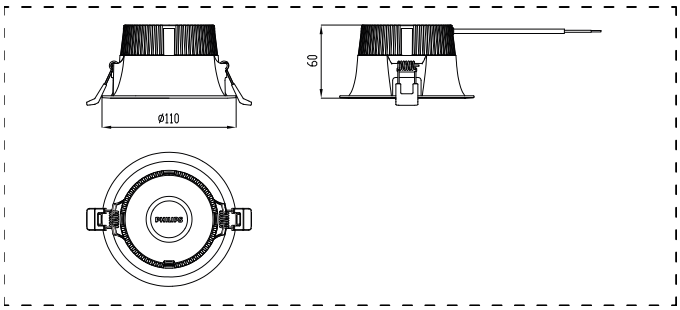

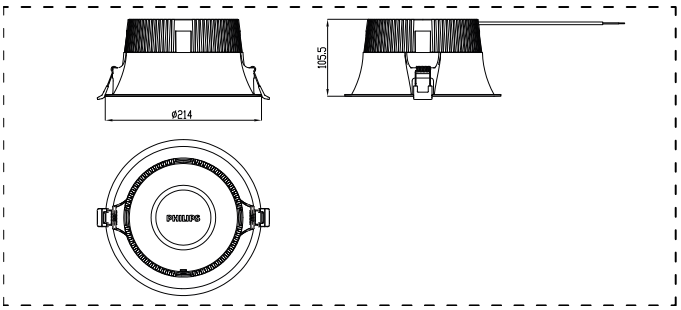

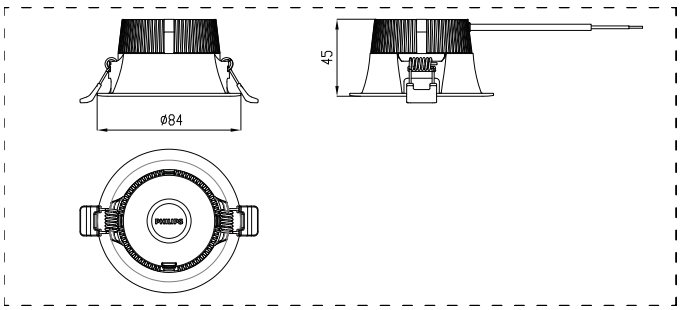

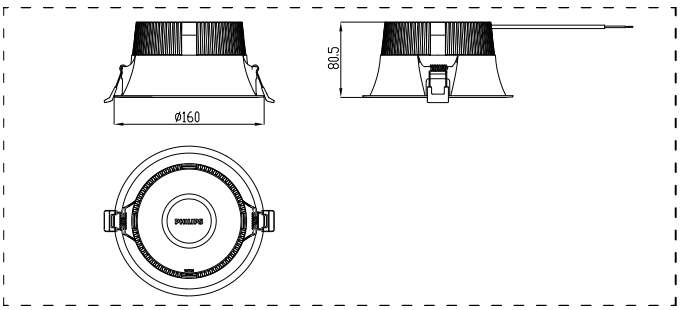

GreenUp deep recessed downlight G2

Light Technical	
Color rendering index (CRI)	80
Operating and Electrical	
Protection class IEC	Safety class II
Input Voltage	220 to 240 V
Line Frequency	50 or 60 Hz
Controls and Dimming	
Dimmable	No
Mechanical and Housing	
Optical cover type	Polycarbonate Diffuser
Housing Color	Black
Mech. impact protection code	IK03
Ingress protection code	IP20
Approval and Application	
Ambient temperature range	-20 to +40 °C
CE mark	Yes
Initial Performance (IEC Compliant)	
Luminous flux tolerance	-10% / +20%

Light Technical

Order Code	Full Product Name	Correlated Color Temperature (Nom)	Luminous Efficacy (rated) (Nom)	Luminous Flux
911401565143	DN035B D200 LED22/830 PSU WH G2	3000 K	99 lm/W	1,980 lm
911401565243	DN035B D200 LED22/840 PSU WH G2	4000 K	110 lm/W	2,200 lm
911401565343	DN035B D200 LED22/865 PSU WH G2	6500 K	110 lm/W	2,200 lm
911401565443	DN035B D200 LED32/830 PSU WH G2	3000 K	99 lm/W	2,880 lm
911401565543	DN035B D200 LED32/840 PSU WH G2	4000 K	110 lm/W	3,200 lm
911401565643	DN035B D200 LED32/865 PSU WH G2	6500 K	110 lm/W	3,200 lm
911401563643	DN035B D75 LED6/830 PSU WH G2	3000 K	90 lm/W	540 lm
911401563743	DN035B D75 LED6/840 PSU WH G2	4000 K	100 lm/W	600 lm
911401563843	DN035B D75 LED6/865 PSU WH G2	6500 K	100 lm/W	600 lm
911401563943	DN035B D100 LED6/830 PSU WH G2	3000 K	90 lm/W	558 lm
911401564043	DN035B D100 LED6/840 PSU WH G2	4000 K	100 lm/W	620 lm
911401564143	DN035B D100 LED6/865 PSU WH G2	6500 K	100 lm/W	620 lm
911401564243	DN035B D100 LED10/830 PSU WH G2	3000 K	99 lm/W	855 lm
911401564343	DN035B D100 LED10/840 PSU WH G2	4000 K	110 lm/W	950 lm
911401564443	DN035B D100 LED10/865 PSU WH G2	6500 K	110 lm/W	950 lm
911401564543	DN035B D150 LED16/830 PSU WH G2	3000 K	99 lm/W	1,440 lm
911401564643	DN035B D150 LED16/840 PSU WH G2	4000 K	110 lm/W	1,600 lm
911401564743	DN035B D150 LED16/865 PSU WH G2	6500 K	110 lm/W	1,600 lm
911401564843	DN035B D150 LED20/830 PSU WH G2	3000 K	99 lm/W	1,800 lm
911401564943	DN035B D150 LED20/840 PSU WH G2	4000 K	110 lm/W	2,000 lm
911401565043	DN035B D150 LED20/865 PSU WH G2	6500 K	110 lm/W	2,000 lm

Operating and Electrical

Order Code	Full Product Name	Power Consumption
911401565143	DN035B D200 LED22/830 PSU WH G2	18 W
911401565243	DN035B D200 LED22/840 PSU WH G2	18 W
911401565343	DN035B D200 LED22/865 PSU WH G2	18 W

Order Code	Full Product Name	Power Consumption
911401565443	DN035B D200 LED32/830 PSU WH G2	26 W
911401565543	DN035B D200 LED32/840 PSU WH G2	26 W
911401565643	DN035B D200 LED32/865 PSU WH G2	26 W

GreenUp deep recessed downlight G2

Order Code	Full Product Name	Power Consumption
911401563643	DN035B D75 LED6/830 PSU WH G2	5.5 W
911401563743	DN035B D75 LED6/840 PSU WH G2	5.5 W
911401563843	DN035B D75 LED6/865 PSU WH G2	5.5 W
911401563943	DN035B D100 LED6/830 PSU WH G2	6 W
911401564043	DN035B D100 LED6/840 PSU WH G2	6 W
911401564143	DN035B D100 LED6/865 PSU WH G2	6 W
911401564243	DN035B D100 LED10/830 PSU WH G2	8.5 W
911401564343	DN035B D100 LED10/840 PSU WH G2	8.5 W

Order Code	Full Product Name	Power Consumption
911401564443	DN035B D100 LED10/865 PSU WH G2	8.5 W
911401564543	DN035B D150 LED16/830 PSU WH G2	13 W
911401564643	DN035B D150 LED16/840 PSU WH G2	13 W
911401564743	DN035B D150 LED16/865 PSU WH G2	13 W
911401564843	DN035B D150 LED20/830 PSU WH G2	16.5 W
911401564943	DN035B D150 LED20/840 PSU WH G2	16.5 W
911401565043	DN035B D150 LED20/865 PSU WH G2	16.5 W

© 2025 Signify Holding All rights reserved. Signify does not give any representation or warranty as to the accuracy or completeness of the information included herein and shall not be liable for any action in reliance thereon. The information presented in this document is not intended as any commercial offer and does not form part of any quotation or contract, unless otherwise agreed by Signify. All trademarks are owned by Signify Holding or their respective owners.