**YHB709 CUR 8000 SPK 2xHOLE-M8-80 RAL**

912401451573



# 8.0 m, RAL color

One of the main characteristics of the Ocean family range, part of Philips' UrbanStyling approach, is the total solution it offers municipalities, landscape architects, urban planners and lighting designers. Urban enhancement can only be achieved when both the luminaires and their supports form part of an integrated concept. To this end, the Ocean family includes a range of dedicated poles and brackets which are consistent with the visual style of the Ocean Road LED and Ocean Ambiance LED luminaires.

## Mechanical and Housing

| | |
|---|---|
| Fixation diameter | Mounting device diameter 60 mm |
| Pole top diameter | 60 mm |
| Pole height | 8.0 m |
| Pole color | RAL color |
| Pole type | Pole with flange |
| Net Weight (Piece) | 70.000 kg |

## Approval and Application

| | |
|---|---|
| CE mark | Yes |
| EU RoHS compliant | Yes |

## Sustainability Data

| | |
|---|---|
| Non-virgin material ratio of the packaging | Cardboard > 80% recycled |
| Packaging Recyclable content ratio | Cardboard recycling rate > 80% |
| Packaging Material | Cardboard |

## Product Data

| | |
|---|---|
| Order product name | YHB709 CUR 8000 SPK 2xHOLE-M8-80 RAL |
| Full product name | YHB709 CUR 8000 SPK 2xHOLE-M8-80 RAL |
| Full product code | 871869693790700 |
| Order code | 912401451573 |
| Material Nr. (12NC) | 912401451573 |
| Numerator - Quantity Per Pack | 1 |
| EAN/UPC - Product/Case | 8718696937907 |
| Numerator - Packs per outer box | 1 |
| EAN/UPC - Case | 8718696937907 |

## Dimensional drawing

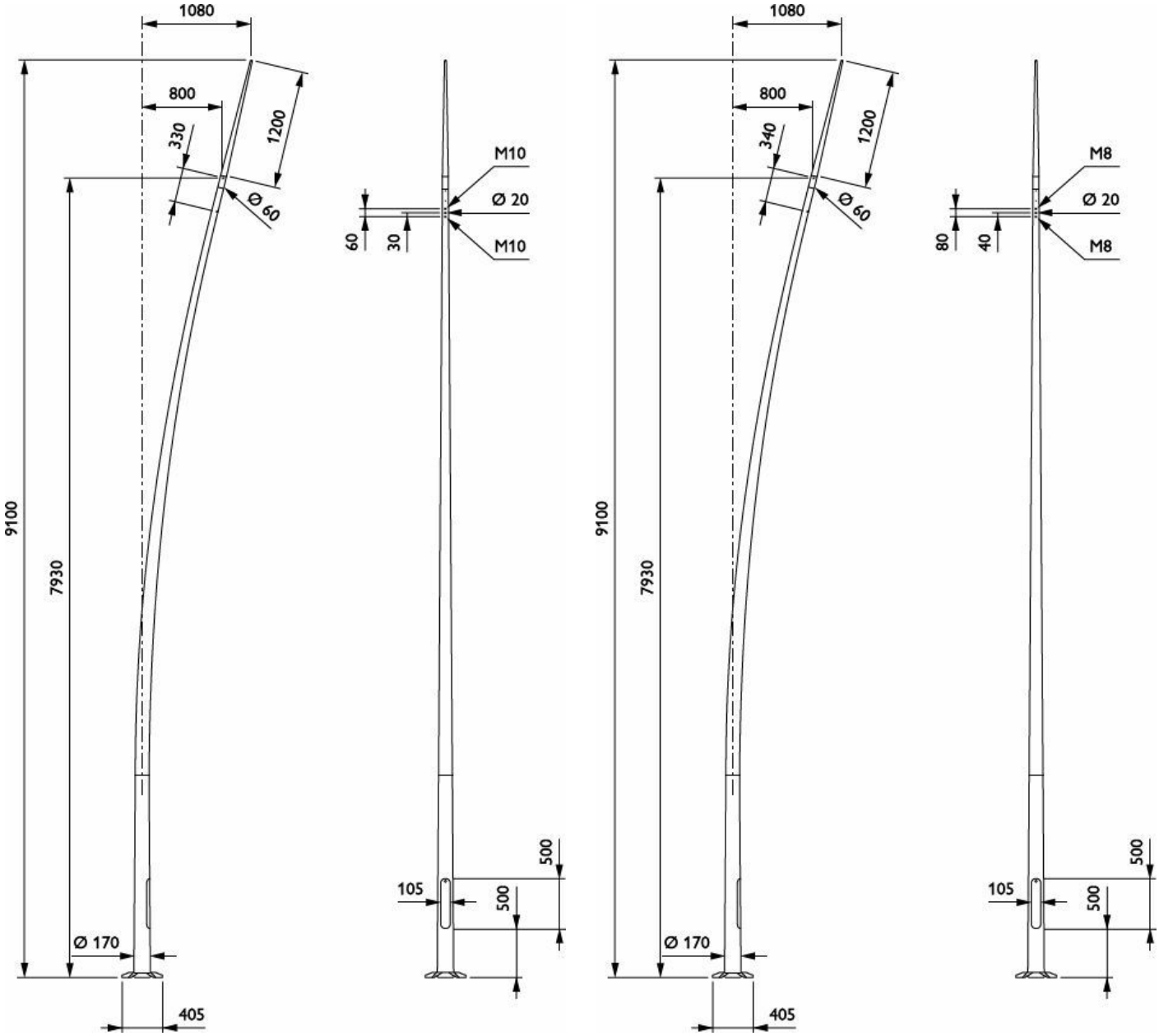


© 2026 Signify Holding. All rights reserved. The information provided herein is subject to change, without notice. Signify does not give any representation or warranty as to the accuracy or completeness of the information included herein and shall not be liable for any action in reliance thereon. The information presented in this document is not intended as any commercial offer and does not form part of any quotation or contract, unless otherwise agreed by Signify. All trademarks are owned by Signify Holding or their respective owners.