PHILIPS

HID-Basic ballasts for HPL and HPI(PLUS) lamps

DBCHPL



Simple, robust magnetic ballast

The HID-Basic ballast is an impregnated (HID standard) electromagnetic ballast for HID lamps, for use in combination with an external ignitor.

Benefits

- Limited volume of ballast coil; also lightweight
- Simple installation and cabling

Applications

- For built-in applications for road and public lighting with HPL, HPI and HPI (Plus) lamps
- HID-Basic ballasts should be restricted to built-in situations where relative humidity is limited.

Features

- Orthocyclic winding process
- Ballasts equipped with screw terminal blocks as standard
- Earthing-while-mounting facility (HID Standard ballasts)
- Low wattage losses

Versions



GPPR BCHPL1 0001

Dimensional drawing

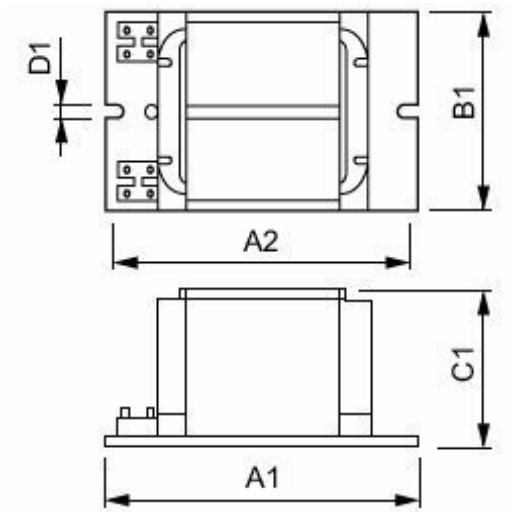

Product	D1	C1	A1	A2	B1
BHLA 125L 200	6.3 mm	64.5 mm	120.0 mm	100.0 mm	75.0 mm
BHLE 250L 200 TS	6.2 mm	64.5 mm	165.0 mm	144.0 mm	75.5 mm
BHLE 400L 200 TS	6.2 mm	64.5 mm	165.0 mm	144.0 mm	75.5 mm

Operating and Electrical

Input Voltage	220 V
Line Frequency	50 Hz
Input Frequency	50 Hz

© 2026 Signify Holding. All rights reserved. The information provided herein is subject to change, without notice. Signify does not give any representation or warranty as to the accuracy or completeness of the information included herein and shall not be liable for any action in reliance thereon. The information presented in this document is not intended as any commercial offer and does not form part of any quotation or contract, unless otherwise agreed by Signify. Philips and the Philips Shield Emblem are registered trademarks of Koninklijke Philips N.V.