PHILIPS

HF-Performer III for TL-D lamps

HFP3TLD



Unsurpassed energy-efficient and long-lasting solution

HF-Performer III TL-D III ballasts offer maximum versatility and meet all of the necessary commercial grade specifications. They also offer the added benefits of lamp striation reduction technology, making these ballasts compatible with energy-saving lamps. As such, these ballasts are part of an overall high-efficiency lighting system that may help you or your customers to achieve any international or local energy code you need to comply with. HF-Performer III TL-D III ballasts are the ideal choice for a broad range of new construction and retrofit applications within the commercial sector, including general surface mounting or office lighting, parking garages, warehouses, waterproof and other applications. The ballast is primarily designed for Indoor application. For outdoor application, the luminaire should be minimum ClassIand need to be sufficiently protected against water & dust. The installation should also be guard against any lightening surge or any other necessary electrical protection as deemed in such typical installation & application.

Benefits

- Exceptional energy efficiency with striation-reduction technology in lighting systems at lower temperatures
- Maximum reliability in system operation
- Provides extended lamp life in frequent-switching applications

Applications

- Suitable for DC operation and emergency lighting installations; full compliance with requirements for emergency lighting according to EN 61347-2-3 -annex J
- For applications with high switching activity, e.g. where movement-detection control devices are used
- For luminaires of protection class I and protection class II used in office buildings, hospitals, supermarkets, department stores, industrial premises and schools

Features

- Highest CELMA Energy Efficiency Index A2 BAT
- Complies with CE, ENEC, EL, VDE-EMC, CCC marks of conformity
- Average nominal service lifetime over 100,000 hours (at Ta 50 °C) with a failure rate ≤ 0.1 % per 1,000 hours)
- Optimized lamp preheating for over 50,000 On/Off switch operations without replacement of lamps

Versions



Lamp Driver, eFluo, HF-P 3/418 TL-D III 220-240V 50/60Hz IDC



Lamp Driver, eFluo, HF-P 158 TL-D III 220-240V 50/60Hz IDC



Lamp Driver, eFluo, HF-P 258 TL-D III 220-240V 50/60Hz IDC



Lamp Driver, eFluo, HF-P 136 TL-D III 220-240V 50/60Hz IDC



Lamp Driver, eFluo, HF-P 236 TL-D III 220-240V 50/60Hz IDC

Dimensional drawing

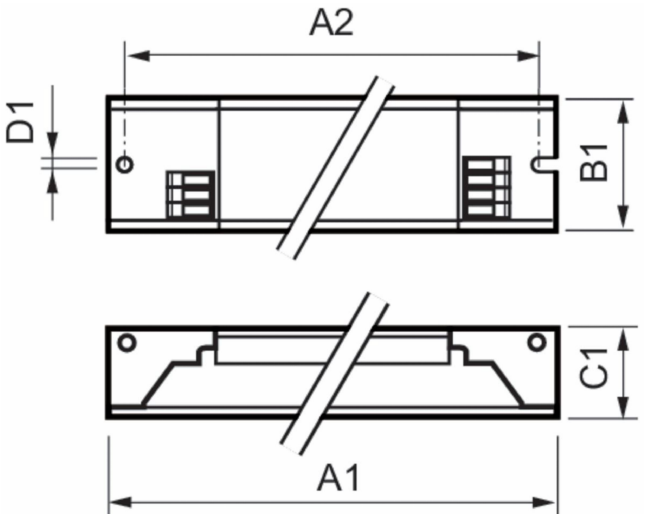

Product	D1	C1	A1	A2	B1
HF-P 118/136 TL-D III 220-240V 50/60 Hz	4.2 mm	28.0 mm	280.0 mm	265.0 mm	30.0 mm
HF-P 158 TL-D III 220-240V 50/60Hz IDC	4.2 mm	28.0 mm	280.0 mm	265.0 mm	30.0 mm
HF-P 218/236 TL-D III 220-240V 50/60 Hz	4.2 mm	28.0 mm	280.0 mm	265.0 mm	30.0 mm
HF-P 258 TL-D III 220-240V 50/60Hz IDC	4.2 mm	28.0 mm	280.0 mm	265.0 mm	30.0 mm
HF-P 3/418 TL-D III 220-240V 50/60Hz IDC	4.2 mm	28.0 mm	280.0 mm	265.0 mm	40.0 mm

Operating and Electrical

Input Voltage	220 to 240 V
Line Frequency	50 to 60 Hz
Input Frequency	50 to 60 Hz

Approval and Application

Energy Efficiency Index	A2 BAT

Operating and Electrical

Order Code	Full Product Name	Number of Products on MCB (16A Type B) (Nom)
913713031466	HF-P 3/418 TL-D III 220-240V 50/60Hz IDC	28
913713031566	HF-P 118/136 TL-D III 220-240V 50/60 Hz	28
913713031866	HF-P 158 TL-D III 220-240V 50/60Hz IDC	28
913713031666	HF-P 218/236 TL-D III 220-240V 50/60 Hz	28
913713031966	HF-P 258 TL-D III 220-240V 50/60Hz IDC	12

Mechanical and Housing

Order Code	Full Product Name	Housing
913713031466	HF-P 3/418 TL-D III 220-240V 50/60Hz IDC	L 280x40x28
913713031566	HF-P 118/136 TL-D III 220-240V 50/60 Hz	L 280x30x28
913713031866	HF-P 158 TL-D III 220-240V 50/60Hz IDC	L 280x30x28
913713031666	HF-P 218/236 TL-D III 220-240V 50/60 Hz	L 280x30x28
913713031966	HF-P 258 TL-D III 220-240V 50/60Hz IDC	L 280x30x28

© 2026 Signify Holding. All rights reserved. The information provided herein is subject to change, without notice. Signify does not give any representation or warranty as to the accuracy or completeness of the information included herein and shall not be liable for any action in reliance thereon. The information presented in this document is not intended as any commercial offer and does not form part of any quotation or contract, unless otherwise agreed by Signify. Philips and the Philips Shield Emblem are registered trademarks of Koninklijke Philips N.V.