PHILIPS

HF-Essential II for TL5/TL-D

HFEII



HF-Essential II for TL5 and TL-D

Essentially smart and reliable. HF-Essential II is the most cost-effective solution for reliably operation of a fluorescent lamp. It is also the ideal entry-level product for electromagnetic system users who want to take advantage of the benefits provided by electronic ballasts. The cost-saving and reliable HF-Essential II is energy efficiency class A2, and its robust design meets all relevant international safety and performance standards. HF- Essential II is the ideal choice for a broad range of new construction and retrofit applications within the commercial sector, including general surface mounting and office lighting, parking garages, warehouses and other applications. The ballast is primarily designed for Indoor application. For outdoor application, the luminaire should be minimum ClassIand need to be sufficiently protected against water & dust. The installation should also be guard against any lightening surge or any other necessary electrical protection as deemed in such typical installation & application.

Benefits

- Average nominal service lifetime over 45,000 hours (at Ta 50 °C)
- Optimized lamp preheating for min. 25,000 on/off switch operations without replacement of lamps
- Has CE, KEMA, CCC marks of conformity

Applications

- Suitable for DC operation and emergency lighting installations
- Extended lamp life in frequent- switching applications without replacement of lamps, e.g. where occupancy sensors or motion detectors are used with 15 switches per day
- For luminairies of protection class I and protection class II used in office buildings, hospitals, supermarkets, department stores, and schools

Features

- Multi-power technology for precision operation of multiple lamp types of various wattages
- Mono/Dual function: operation with 1 or 2 lamps
- Maximum reliability in system operation

Versions



GPPR_HFETLDTL_0002-
Product photo

Dimensional drawing

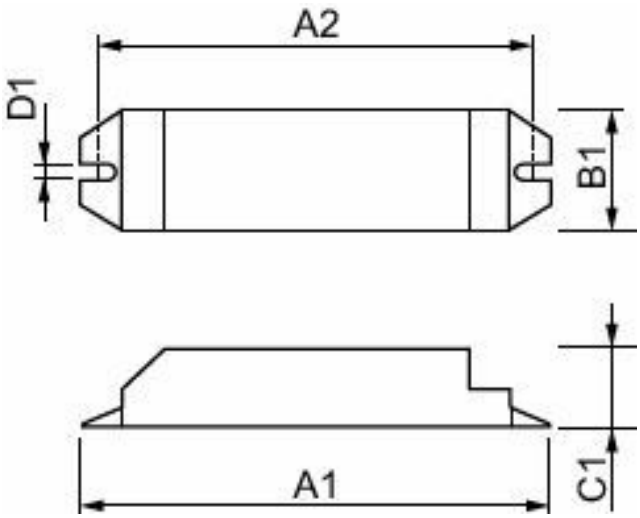

Product	D1	C1	A1	A2	B1
HF-E 1/2 54 TL5 II 220-240V 50/60Hz	4.2 mm	22.7 mm	280.0 mm	270.0 mm	30.0 mm
HF-E II 236 TL-D 220-240V 50/60Hz	4.2 mm	28.7 mm	211.0 mm	198.0 mm	39.6 mm

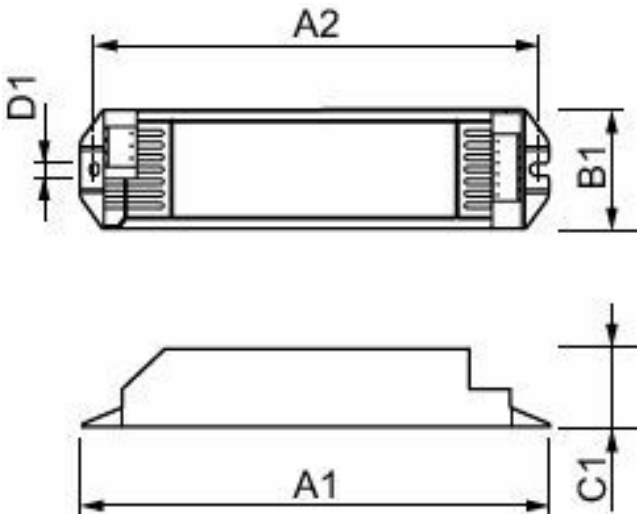

Product	D1	C1	A1	A2	B1
HF-E 1/2 58 TL-D II 220-240V 50/60Hz	4.2 mm	28.7 mm	211.0 mm	198.0 mm	40.0 mm

Operating and Electrical

Input Voltage	220 to 240 V
Line Frequency	50 to 60 Hz
Input Frequency	50 to 60 Hz

Approval and Application

Energy Efficiency Index	A2

Operating and Electrical

Order Code	Full Product Name	Number of Products on MCB (16A Type B) (Nom)
913713040866	HF-E 1/2 54 TL5 II 220-240V 50/60Hz	20
913713040966	HF-E 1/2 58 TL-D II 220-240V 50/60Hz	20
913713041166	HF-E II 236 TL-D 220-240V 50/60Hz	16

Mechanical and Housing

Order Code	Full Product Name	Housing
913713040866	HF-E 1/2 54 TL5 II 220-240V 50/60Hz	L280x30x22,7
913713040966	HF-E 1/2 58 TL-D II 220-240V 50/60Hz	L 211x40x28.7
913713041166	HF-E II 236 TL-D 220-240V 50/60Hz	L 211x40x28.7

© 2026 Signify Holding. All rights reserved. The information provided herein is subject to change, without notice. Signify does not give any representation or warranty as to the accuracy or completeness of the information included herein and shall not be liable for any action in reliance thereon. The information presented in this document is not intended as any commercial offer and does not form part of any quotation or contract, unless otherwise agreed by Signify. Philips and the Philips Shield Emblem are registered trademarks of Koninklijke Philips N.V.