PHILIPS

MASTER SON-T PIA Plus

DSONTPIP



The most reliable solution in road lighting

High Pressure Sodium lamp with clear tubular outer bulb, high output and long reliable lifetime

Benefits

- Initial investment saving options with "Plus" concept
- High lumen output, maintained over life
- Minimal maintenance cost

Applications

- Road and residential lighting
- Decorative floodlighting, illumination
- Industrial area lighting
- Recreational sports facilities indoor and outdoor

Features

- Clear tubular outer bulb
- Ceramic discharge tube with Unique Philips Integrated Antenna (PIA) concept enabling long and reliable lifetime
- "Plus" concept with high efficacy translates into high light output and improved lumen maintenance
- Robust construction with few welding points is highly vibration- and shock-resistant, further reducing early failures and extending lamp life
- Dimmable

- Control gear must include end-of-life protection (IEC60662, IEC 62035)
- A lamp breaking is extremely unlikely to have any impact on your health. If a lamp breaks, ventilate the room for 30 minutes and remove the parts, preferably with gloves. Put them in a sealed plastic bag and take it to your local waste facilities for recycling. Do not use a vacuum cleaner.

Versions



LPPR SON-TPIA Plus E40



LPPR SON-TPIA 0007

Dimensional drawing

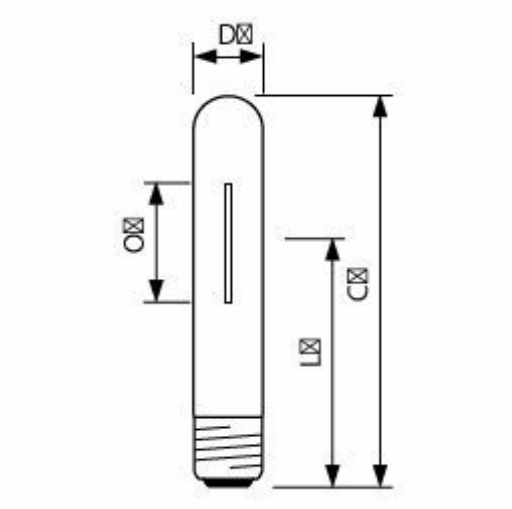

Product	D (max)	O	L	C (max)
MASTER SON-T PIA PLUS 150W E E40 1SL/12	47 mm	61 mm	132 mm	209 mm
MST SON-T PIA PLUS 250W E E40 1SL/12	48 mm	64 mm	158 mm	257 mm
MST SON-T PIA PLUS 400W E E40 1SL/12	48 mm	83 mm	175 mm	279 mm
MST SON-T PIA Plus 100W E40 1SL/12	47 mm	47 mm	132 mm	209 mm
MST SON-T PIA Plus 100W/220 E40 1SL/12	48 mm	47 mm	132 mm	210 mm
MST SON-T PIA Plus 150W E E40	47 mm	61 mm	132 mm	209 mm
MST SON-T PIA Plus 150W E40 1SL/12	47 mm	61 mm	132 mm	209 mm
MST SON-T PIA Plus 150W/220 E40 - 1SL/12	48 mm	61 mm	132 mm	210 mm
MST SON-T PIA Plus 250W E E40	48 mm	64 mm	158 mm	257 mm
MST SON-T PIA Plus 250W E E40 1SL/12	48 mm	64 mm	158 mm	257 mm
MST SON-T PIA Plus 250W E40 1SL/12	48 mm	64 mm	158 mm	257 mm
MST SON-T PIA Plus 400W E E40	48 mm	83 mm	175 mm	279 mm
MST SON-T PIA Plus 400W E E40 1SL/12	48 mm	83 mm	175 mm	279 mm
MST SON-T PIA Plus 400W E40 1SL/12	48 mm	83 mm	175 mm	279 mm
MST SON-T PIA Plus 50W/220 E27 1SL/12	36 mm	35 mm	104 mm	156 mm
MST SON-T PIA Plus 600W/220 E40 1SL/12	47 mm	126 mm	174.2 mm	279 mm
MST SON-T PIA Plus 70W E E27	36 mm	42 mm	104 mm	156 mm
MST SON-T PIA Plus 70W/220 E27 1SL/12	36 mm	42 mm	104 mm	156 mm
MSTSON-TPIA Plus 70W E27 1CT/12	35.75 mm	42 mm	102 mm	156 mm
SON-T PIA PLUS 250W E E40 1SL/12	48 mm	64 mm	158 mm	257 mm

General Information

Operating Position	UNIVERSAL [Any or Universal (U)]

Light Technical

Color rendering index (CRI)	-

Mechanical and Housing

Bulb Finish	Clear

General Information

Order Code	Full Product Name	Cap-Base
928144709230	MST SON-T PIA Plus 250W E E40 1SL/12	E40
928144709292	MST SON-T PIA Plus 250W E E40	E40
928144709293	MST SON-T PIA Plus 250W E40 1SL/12	E40
928144709295	SON-T PIA PLUS 250W E E40 1SL/12	E40
928144709298	MST SON-T PIA PLUS 250W E E40 1SL/12	E40
928144809227	MST SON-T PIA Plus 400W E E40 1SL/12	E40
928144809292	MST SON-T PIA Plus 400W E E40	E40
928144809293	MST SON-T PIA Plus 400W E40 1SL/12	E40
928144809298	MST SON-T PIA PLUS 400W E E40 1SL/12	E40
928150909230	MST SON-T PIA Plus 150W/220 E40 - 1SL/12	E40
928151709230	MST SON-T PIA Plus 100W/220 E40 1SL/12	E40
928158409227	MST SON-T PIA Plus 600W/220 E40 1SL/12	E40
928483300095	MST SON-T PIA Plus 100W E40 1SL/12	E40
928483400093	MASTER SON-T PIA PLUS 150W E E40 1SL/12	E40
928483400094	MST SON-T PIA Plus 150W E E40	E40
928483400095	MST SON-T PIA Plus 150W E40 1SL/12	E40
928151900028	MST SON-T PIA Plus 50W/220 E27 1SL/12	E27
928152700028	MST SON-T PIA Plus 70W/220 E27 1SL/12	E27
928152700091	MST SON-T PIA Plus 70W E E27	E27
928483200094	MSTSON-TPIA Plus 70W E27 1CT/12	E27

Light Technical

Order Code	Full Product Name	Luminous Flux	Chromaticity Coordinate X (Nom)	Chromaticity Coordinate Y (Nom)	Correlated Color Temperature (Nom)	Luminous Efficacy (rated) (Nom)
928144709230	MST SON-T PIA Plus 250W E E40 1SL/12	33,000 lm	0.535	0.420	2000 K	125 lm/W
928144709292	MST SON-T PIA Plus 250W E E40	32,100 lm	0.535	0.420	2000 K	125 lm/W
928144709293	MST SON-T PIA Plus 250W E40 1SL/12	33,000 lm	0.535	0.420	2000 K	125 lm/W
928144709295	SON-T PIA PLUS 250W E E40 1SL/12	32,100 lm	0.535	0.420	2000 K	125 lm/W
928144709298	MST SON-T PIA PLUS 250W E E40 1SL/12	32,100 lm	0.535	0.420	2000 K	125 lm/W
928144809227	MST SON-T PIA Plus 400W E E40 1SL/12	55,900 lm	0.535	0.42	2000 K	137 lm/W
928144809292	MST SON-T PIA Plus 400W E E40	-	0.535	0.420	2000 K	137 lm/W

Order Code	Full Product Name	Luminous Flux	Chromaticity Coordinate X (Nom)	Chromaticity Coordinate Y (Nom)	Correlated Color Temperature (Nom)	Luminous Efficacy (rated) (Nom)
928144809293	MST SON-T PIA Plus 400W E40 1SL/12	55,900 lm	0.535	0.42	2000 K	137 lm/W
928144809298	MST SON-T PIA PLUS 400W E E40 1SL/12	-	0.535	0.420	2000 K	137 lm/W
928150909230	MST SON-T PIA Plus 150W/220 E40 - 1SL/12	17,800 lm	0.535	0.42	2000 K	115.16 lm/W
928151709230	MST SON-T PIA Plus 100W/220 E40 1SL/12	10,600 lm	0.535	0.42	2000 K	105 lm/W
928158409227	MST SON-T PIA Plus 600W/220 E40 1SL/12	-	0.530	0.428	2000 K	149 lm/W
928483300095	MST SON-T PIA Plus 100W E40 1SL/12	10,600 lm	0.535	0.42	2000 K	105 lm/W
928483400093	MASTER SON-T PIA PLUS 150W E E40 1SL/12	17,800 lm	0.535	0.420	2000 K	115 lm/W
928483400094	MST SON-T PIA Plus 150W E E40	17,800 lm	0.535	0.420	2000 K	115 lm/W
928483400095	MST SON-T PIA Plus 150W E40 1SL/12	17,800 lm	0.535	0.42	2000 K	115 lm/W
928151900028	MST SON-T PIA Plus 50W/220 E27 1SL/12	4,500 lm	0.54	0.42	1900 K	83 lm/W
928152700028	MST SON-T PIA Plus 70W/220 E27 1SL/12	6,650 lm	0.54	0.42	1900 K	90 lm/W
928152700091	MST SON-T PIA Plus 70W E E27	6,650 lm	0.540	0.420	1900 K	90 lm/W
928483200094	MSTSON-TPIA Plus 70W E27 1CT/12	6,650 lm	0.54	0.42	1900 K	91 lm/W

Operating and Electrical

Order Code	Full Product Name	Power Consumption	Voltage (Nom)
928144709230	MST SON-T PIA Plus 250W E E40 1SL/12	264 W	109 V
928144709292	MST SON-T PIA Plus 250W E E40	257.0 W	102 V
928144709293	MST SON-T PIA Plus 250W E40 1SL/12	264 W	102 V
928144709295	SON-T PIA PLUS 250W E E40 1SL/12	257.0 W	102 V
928144709298	MST SON-T PIA PLUS 250W E E40 1SL/12	257.0 W	102 V
928144809227	MST SON-T PIA Plus 400W E E40 1SL/12	408.0 W	105 V
928144809292	MST SON-T PIA Plus 400W E E40	408.0 W	105 V
928144809293	MST SON-T PIA Plus 400W E40 1SL/12	408.0 W	105 V
928144809298	MST SON-T PIA PLUS 400W E E40 1SL/12	408.0 W	105 V
928150909230	MST SON-T PIA Plus 150W/220 E40 - 1SL/12	155.0 W	104 V
928151709230	MST SON-T PIA Plus 100W/220 E40 1SL/12	101.0 W	100 V
928158409227	MST SON-T PIA Plus 600W/220 E40 1SL/12	603 W	110 V
928483300095	MST SON-T PIA Plus 100W E40 1SL/12	101.0 W	100 V
928483400093	MASTER SON-T PIA PLUS 150W E E40 1SL/12	154.0 W	100 V
928483400094	MST SON-T PIA Plus 150W E E40	154.0 W	100 V
928483400095	MST SON-T PIA Plus 150W E40 1SL/12	155.0 W	100 V
928151900028	MST SON-T PIA Plus 50W/220 E27 1SL/12	54.5 W	91 V
928152700028	MST SON-T PIA Plus 70W/220 E27 1SL/12	74 W	92 V
928152700091	MST SON-T PIA Plus 70W E E27	74 W	92 V
928483200094	MSTSON-TPIA Plus 70W E27 1CT/12	74.0 W	93 V

Controls and Dimming

Order Code	Full Product Name	Dimmable
928144709230	MST SON-T PIA Plus 250W E E40 1SL/12	Yes

Order Code	Full Product Name	Dimmable
928144709292	MST SON-T PIA Plus 250W E E40	Yes
928144709293	MST SON-T PIA Plus 250W E40 1SL/12	Yes
928144709295	SON-T PIA PLUS 250W E E40 1SL/12	Yes
928144709298	MST SON-T PIA PLUS 250W E E40 1SL/12	Yes
928144809227	MST SON-T PIA Plus 400W E E40 1SL/12	Yes
928144809292	MST SON-T PIA Plus 400W E E40	Yes
928144809293	MST SON-T PIA Plus 400W E40 1SL/12	Yes
928144809298	MST SON-T PIA PLUS 400W E E40 1SL/12	Yes
928150909230	MST SON-T PIA Plus 150W/220 E40 - 1SL/12	Yes
928151709230	MST SON-T PIA Plus 100W/220 E40 1SL/12	Yes
928158409227	MST SON-T PIA Plus 600W/220 E40 1SL/12	No
928483300095	MST SON-T PIA Plus 100W E40 1SL/12	Yes
928483400093	MASTER SON-T PIA PLUS 150W E E40 1SL/12	No
928483400094	MST SON-T PIA Plus 150W E E40	No
928483400095	MST SON-T PIA Plus 150W E40 1SL/12	Yes
928151900028	MST SON-T PIA Plus 50W/220 E27 1SL/12	Yes
928152700028	MST SON-T PIA Plus 70W/220 E27 1SL/12	Yes
928152700091	MST SON-T PIA Plus 70W E E27	Yes
928483200094	MSTSON-TPIA Plus 70W E27 1CT/12	Yes

Mechanical and Housing

Order Code	Full Product Name	Bulb Shape
928144709230	MST SON-T PIA Plus 250W E E40 1SL/12	T46
928144709292	MST SON-T PIA Plus 250W E E40	T46
928144709293	MST SON-T PIA Plus 250W E40 1SL/12	T46
928144709295	SON-T PIA PLUS 250W E E40 1SL/12	T46
928144709298	MST SON-T PIA PLUS 250W E E40 1SL/12	T46
928144809227	MST SON-T PIA Plus 400W E E40 1SL/12	T46
928144809292	MST SON-T PIA Plus 400W E E40	T46
928144809293	MST SON-T PIA Plus 400W E40 1SL/12	T46
928144809298	MST SON-T PIA PLUS 400W E E40 1SL/12	T46
928150909230	MST SON-T PIA Plus 150W/220 E40 - 1SL/12	T46
928151709230	MST SON-T PIA Plus 100W/220 E40 1SL/12	T46
928158409227	MST SON-T PIA Plus 600W/220 E40 1SL/12	T46
928483300095	MST SON-T PIA Plus 100W E40 1SL/12	T46
928483400093	MASTER SON-T PIA PLUS 150W E E40 1SL/12	T46
928483400094	MST SON-T PIA Plus 150W E E40	T46
928483400095	MST SON-T PIA Plus 150W E40 1SL/12	T46
928151900028	MST SON-T PIA Plus 50W/220 E27 1SL/12	T35
928152700028	MST SON-T PIA Plus 70W/220 E27 1SL/12	T35
928152700091	MST SON-T PIA Plus 70W E E27	T35
928483200094	MSTSON-TPIA Plus 70W E27 1CT/12	T35

Approval and Application

Order Code	Full Product Name	Mercury (Hg) Content (Max)	Mercury (Hg) Content (Nom)	Energy Consumption kWh/ 1000 h
928144709230	MST SON-T PIA Plus 250W E E40 1SL/12	15.1 mg	15.1 mg	257 kWh
928144709292	MST SON-T PIA Plus 250W E E40	-	15.1 mg	286 kWh
928144709293	MST SON-T PIA Plus 250W E40 1SL/12	15.1 mg	15.1 mg	257 kWh
928144709295	SON-T PIA PLUS 250W E E40 1SL/12	-	15.1 mg	286 kWh
928144709298	MST SON-T PIA PLUS 250W E E40 1SL/12	-	15.1 mg	286 kWh
928144809227	MST SON-T PIA Plus 400W E E40 1SL/12	19.6 mg	20 mg	408 kWh
928144809292	MST SON-T PIA Plus 400W E E40	-	20 mg	449 kWh
928144809293	MST SON-T PIA Plus 400W E40 1SL/12	19.6 mg	20 mg	408 kWh
928144809298	MST SON-T PIA PLUS 400W E E40 1SL/12	-	20 mg	449 kWh
928150909230	MST SON-T PIA Plus 150W/220 E40 - 1SL/12	15.1 mg	15 mg	155 kWh
928151709230	MST SON-T PIA Plus 100W/220 E40 1SL/12	16.3 mg	16.3 mg	101 kWh
928158409227	MST SON-T PIA Plus 600W/220 E40 1SL/12	-	18.9 mg	663 kWh
928483300095	MST SON-T PIA Plus 100W E40 1SL/12	16.3 mg	14.3 mg	101 kWh
928483400093	MASTER SON-T PIA PLUS 150W E E40 1SL/12	-	13.9 mg	169 kWh
928483400094	MST SON-T PIA Plus 150W E E40	-	13.9 mg	169 kWh
928483400095	MST SON-T PIA Plus 150W E40 1SL/12	15.1 mg	13.9 mg	155 kWh
928151900028	MST SON-T PIA Plus 50W/220 E27 1SL/12	9.8 mg	9.8 mg	55 kWh
928152700028	MST SON-T PIA Plus 70W/220 E27 1SL/12	12.2 mg	12.2 mg	73 kWh
928152700091	MST SON-T PIA Plus 70W E E27	-	12.2 mg	80 kWh
928483200094	MSTSON-TPIA Plus 70W E27 1CT/12	12.2 mg	12.2 mg	73 kWh

© 2026 Signify Holding. All rights reserved. The information provided herein is subject to change, without notice. Signify does not give any representation or warranty as to the accuracy or completeness of the information included herein and shall not be liable for any action in reliance thereon. The information presented in this document is not intended as any commercial offer and does not form part of any quotation or contract, unless otherwise agreed by Signify. Philips and the Philips Shield Emblem are registered trademarks of Koninklijke Philips N.V.